Sitronix

ST7637

65K 132x132 Color Dot Matrix LCD Controller/Driver

1. INTRODUCTION

The ST7637 is a driver & controller LSI for 65K color graphic dot-matrix liquid crystal display systems. It generates 396 Segment and 132 Common driver circuits. This chip is connected directly to a microprocessor, accepts Serial Peripheral Interface (SPI) or 8-bit/16-bit parallel display data and stores in an on-chip display data RAM. It performs display data RAM read/write operation with no external operating clock to minimize power consumption. In addition, because it contains power supply circuits necessary to drive liquid crystal, it is possible to make a display system with the fewest components.

2. FEATURES

Driver Output Circuits

- 396 segment outputs / 132 common outputs

Applicable Duty Ratios

- Various partial display
- Partial window moving & data scrolling

Gray-Scale Display

- 4FRC & 31 PWM function circuit to display 64 gray-scale display
- Support 8 color mode (Idle mode)

On-chip Display Data RAM

- Capacity: 132 x 132 x 16 =278,784 bits

Color support by Interface

- 256 colors (RGB)=(332) mode
- 4k colors (RGB)=(444) mode
- 65K colors (RGB)=(565) mode
- Truncated 262K colors (RGB)=(666) mode
- Truncated 16M colors (RGB)=(888) mode

Microprocessor Interface

- 8/16-bit parallel bi-directional interface with 6800-series or 8080-series
- 4-line serial interface
- 3-line (9-bits) serial interface

On-chip Low Power Analog Circuit

- On-chip oscillator circuit
- Voltage converter (x2~x8) with internal capacitors.
- Extremely Few Outsider Components. (3 Capacitors)
- On-chip Voltage Regulator
- On-chip electronic contrast control function
- Voltage follower (LCD bias: 1/5~1/12)

Operating Voltage Range

- Supply Digital Voltage (VDD, VDD1): 1.65 to 3.0V
- Supply Analog Voltage (VDD2~VDD5): 2.4 to 3.3V
- LCD driving voltage (VOP = V0 - VSS): Max: 18V

LCD Driving Voltage (OTP)

- Contrast Adjustment Value is stored in the Built-In OTP-ROM for better display quality.

LCD Driving setting suggestion

- VOP = 14V, BIAS=1/9. (VDD=2.8V)
- VOP=15.5V,BIAS=1/10. (VDD=2.8V)

Package Type

- Application for COG

ST7637	6800, 8080, 4-Line, 3-Line interface	ST

3. ST7637 Pad Arrangement (COG)

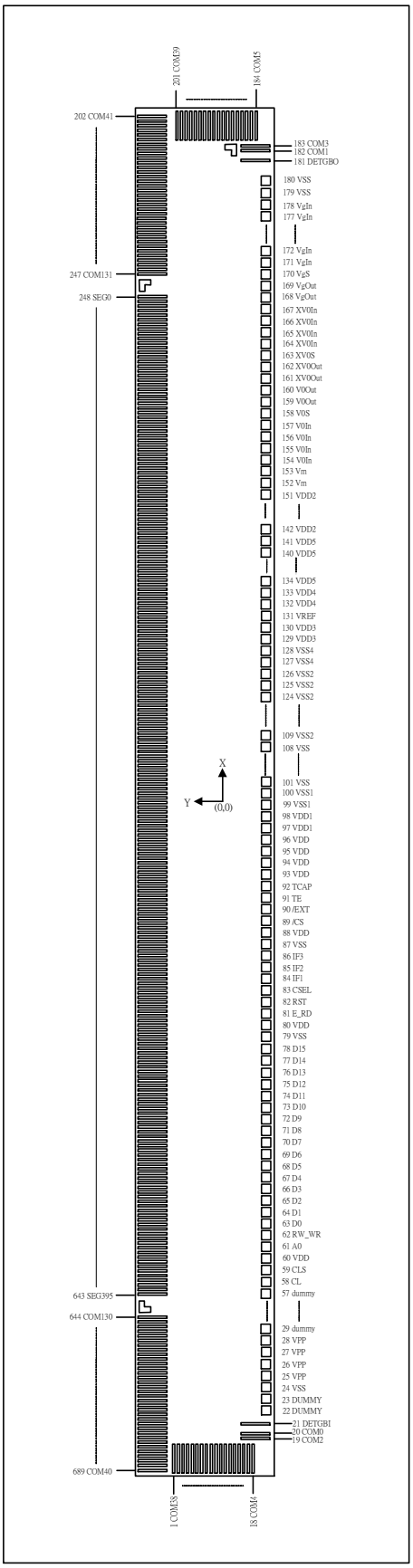

Chip Size :

13600 um x 840 um

Bump Pitch :

PAD 1~ 18, 19~20, 182~183, 184~201, 202~247, pitch=27um (min, com/seg)

PAD 248~643, 644~689 pitch=27um (min, com/seg)

PAD 22 ~ 28,29~180 pitch=80um (I/O)

PAD 20~21, 181~182 pitch=60.15um

PAD 28 ~ 29 pitch=126.53um (I/O)

Bump Size :

PAD 1 ~ 21, PAD 181 ~ 689

Bump width=14um (min, com/seg)

Bump space=13um(min, com/seg)

Bump length=128.58um(min, com/seg)

Bump area=1800um^2(com/seg)

PAD 22~180

Bump width=65um(I/O)

Bump space=15um(I/O)

Bump length=63um(I/O)

Bump area=4095um^2

Bump Height : 15 um

Chip Thickness : 400 um

Alignment mark

The center of alignment mark: see bellow Table

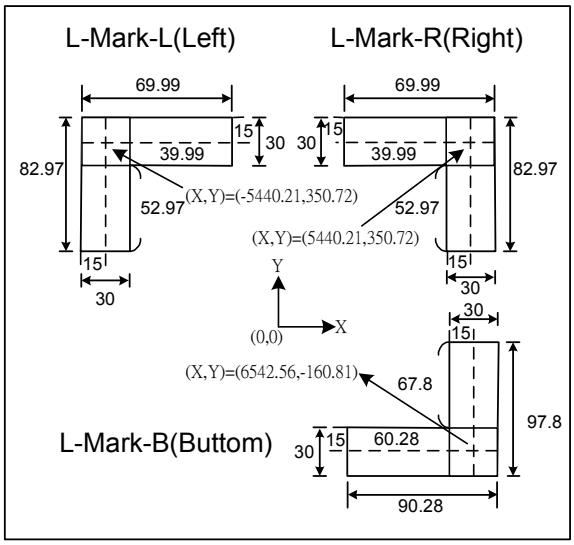

4. Pad Center Coordinates

PAD	NAME	X	Y
1	**COM38**	-6682.71	146.94
2	**COM36**	-6682.71	119.94
3	**COM34**	-6682.71	92.94
4	**COM32**	-6682.71	65.94
5	**COM30**	-6682.71	38.94
6	**COM28**	-6682.71	11.94
7	**COM26**	-6682.71	-15.06
8	**COM24**	-6682.71	-42.06
9	**COM22**	-6682.71	-69.06
10	**COM20**	-6682.71	-96.06
11	**COM18**	-6682.71	-123.06
12	**COM16**	-6682.71	-150.06
13	**COM14**	-6682.71	-177.06
14	**COM12**	-6682.71	-204.06
15	**COM10**	-6682.71	-231.06
16	**COM8**	-6682.71	-258.06
17	**COM6**	-6682.71	-285.06
18	**COM4**	-6682.71	-312.06
19	**COM2**	-6534.45	-302.71
20	**COM0**	-6507.45	-302.71
21	**DETGBI**	-6447.3	-302.71
22	**DUMMY**	-6370.88	-329.5
23	**DUMMY**	-6290.88	-329.5
24	**VSS**	-6210.88	-329.5
25	**VPP**	-6130.88	-329.5
26	**VPP**	-6050.88	-329.5
27	**VPP**	-5970.88	-329.5
28	**VPP**	-5890.88	-329.5
29	**DUMMY**	-5764.35	-329.5
30	**DUMMY**	-5684.35	-329.5
31	**DUMMY**	-5604.35	-329.5
32	**DUMMY**	-5524.35	-329.5
33	**DUMMY**	-5444.35	-329.5
34	**DUMMY**	-5364.35	-329.5
35	**DUMMY**	-5284.35	-329.5
36	**DUMMY**	-5204.35	-329.5
37	**DUMMY**	-5124.35	-329.5
38	**DUMMY**	-5044.35	-329.5
39	**DUMMY**	-4964.35	-329.5
40	**DUMMY**	-4884.35	-329.5
41	**DUMMY**	-4804.35	-329.5
42	**DUMMY**	-4724.35	-329.5
43	**DUMMY**	-4644.35	-329.5
44	**DUMMY**	-4564.35	-329.5
45	**DUMMY**	-4484.35	-329.5
46	**DUMMY**	-4404.35	-329.5
47	**DUMMY**	-4324.35	-329.5
48	**DUMMY**	-4244.35	-329.5
49	**DUMMY**	-4164.35	-329.5
50	**DUMMY**	-4084.35	-329.5
51	**DUMMY**	-4004.35	-329.5
52	**DUMMY**	-3924.35	-329.5
53	**DUMMY**	-3844.35	-329.5
54	**DUMMY**	-3764.35	-329.5
55	**DUMMY**	-3684.35	-329.5
56	**DUMMY**	-3604.35	-329.5
57	**DUMMY**	-3524.35	-329.5
58	**CL**	-3444.35	-329.5
59	**CLS**	-3364.35	-329.5
60	**VDD**	-3284.35	-329.5
61	**A0**	-3204.35	-329.5
62	**RW_WR**	-3124.35	-329.5
63	**D0**	-3044.35	-329.5
64	**D1**	-2964.35	-329.5
65	**D2**	-2884.35	-329.5
66	**D3**	-2804.35	-329.5
67	**D4**	-2724.35	-329.5
68	**D5**	-2644.35	-329.5
69	**D6**	-2564.35	-329.5
70	**D7**	-2484.35	-329.5

71	**D8**	-2404.35	-329.5
72	**D9**	-2324.35	-329.5
73	**D10**	-2244.35	-329.5
74	**D11**	-2164.35	-329.5
75	**D12**	-2084.35	-329.5
76	**D13**	-2004.35	-329.5
77	**D14**	-1924.35	-329.5
78	**D15**	-1844.35	-329.5
79	**VSS**	-1764.35	-329.5
80	**VDD**	-1684.35	-329.5
81	**E_RD**	-1604.35	-329.5
82	**/RST**	-1524.35	-329.5
83	**CSEL**	-1444.35	-329.5
84	**IF1**	-1364.35	-329.5
85	**IF2**	-1284.35	-329.5
86	**IF3**	-1204.35	-329.5
87	**VSS**	-1124.35	-329.5
88	**VDD**	-1044.35	-329.5
89	**/CS**	-964.35	-329.5
90	**/EXT**	-884.35	-329.5
91	**TE**	-804.35	-329.5
92	**TCAP**	-724.35	-329.5
93	**VDD**	-644.35	-329.5
94	**VDD**	-564.35	-329.5
95	**VDD**	-484.35	-329.5
96	**VDD**	-404.35	-329.5
97	**VDD1**	-324.35	-329.5
98	**VDD1**	-244.35	-329.5
99	**VSS1**	-164.35	-329.5
100	**VSS1**	-84.35	-329.5
101	**VSS**	-4.35	-329.5
102	**VSS**	75.65	-329.5
103	**VSS**	155.65	-329.5
104	**VSS**	235.65	-329.5
105	**VSS**	315.65	-329.5
106	**VSS**	395.65	-329.5
107	**VSS**	475.65	-329.5

108	**VSS**	555.65	-329.5
109	**VSS2**	635.65	-329.5
110	**VSS2**	715.65	-329.5
111	**VSS2**	795.65	-329.5
112	**VSS2**	875.65	-329.5
113	**VSS2**	955.65	-329.5
114	**VSS2**	1035.65	-329.5
115	**VSS2**	1115.65	-329.5
116	**VSS2**	1195.65	-329.5
117	**VSS2**	1275.65	-329.5
118	**VSS2**	1355.65	-329.5
119	**VSS2**	1435.65	-329.5
120	**VSS2**	1515.65	-329.5
121	**VSS2**	1595.65	-329.5
122	**VSS2**	1675.65	-329.5
123	**VSS2**	1755.65	-329.5
124	**VSS2**	1835.65	-329.5
125	**VSS2**	1915.65	-329.5
126	**VSS2**	1995.65	-329.5
127	**VSS4**	2075.65	-329.5
128	**VSS4**	2155.65	-329.5
129	**VDD3**	2235.65	-329.5
130	**VDD3**	2315.65	-329.5
131	**VREFP**	2395.65	-329.5
132	**VDD4**	2475.65	-329.5
133	**VDD4**	2555.65	-329.5
134	**VDD5**	2635.65	-329.5
135	**VDD5**	2715.65	-329.5
136	**VDD5**	2795.65	-329.5
137	**VDD5**	2875.65	-329.5
138	**VDD5**	2955.65	-329.5
139	**VDD5**	3035.65	-329.5
140	**VDD5**	3115.65	-329.5
141	**VDD5**	3195.65	-329.5
142	**VDD2**	3275.65	-329.5
143	**VDD2**	3355.65	-329.5
144	**VDD2**	3435.65	-329.5

145	**VDD2**	3515.65	-329.5
146	**VDD2**	3595.65	-329.5
147	**VDD2**	3675.65	-329.5
148	**VDD2**	3755.65	-329.5
149	**VDD2**	3835.65	-329.5
150	**VDD2**	3915.65	-329.5
151	**VDD2**	3995.65	-329.5
152	**Vm**	4075.65	-329.5
153	**Vm**	4155.65	-329.5
154	**V0in**	4235.65	-329.5
155	**V0in**	4315.65	-329.5
156	**V0in**	4395.65	-329.5
157	**V0in**	4475.65	-329.5
158	**V0s**	4555.65	-329.5
159	**V0out**	4635.65	-329.5
160	**V0out**	4715.65	-329.5
161	**XV0out**	4795.65	-329.5
162	**XV0out**	4875.65	-329.5
163	**XV0s**	4955.65	-329.5
164	**XV0in**	5035.65	-329.5
165	**XV0in**	5115.65	-329.5
166	**XV0in**	5195.65	-329.5
167	**XV0in**	5275.65	-329.5
168	**Vgout**	5355.65	-329.5
169	**Vgout**	5435.65	-329.5
170	**Vgs**	5515.65	-329.5
171	**Vgin**	5595.65	-329.5
172	**Vgin**	5675.65	-329.5
173	**Vgin**	5755.65	-329.5
174	**Vgin**	5835.65	-329.5
175	**Vgin**	5915.65	-329.5
176	**Vgin**	5995.65	-329.5
177	**Vgin**	6075.65	-329.5
178	**Vgin**	6155.65	-329.5
179	**VSS**	6235.65	-329.5
180	**VSS**	6315.65	-329.5
181	**DETGBO**	6447.3	-302.71

182	**COM1**	6507.45	-302.71
183	**COM3**	6534.45	-302.71
184	**COM5**	6682.71	-312.06
185	**COM7**	6682.71	-285.06
186	**COM9**	6682.71	-258.06
187	**COM11**	6682.71	-231.06
188	**COM13**	6682.71	-204.06
189	**COM15**	6682.71	-177.06
190	**COM17**	6682.71	-150.06
191	**COM19**	6682.71	-123.06
192	**COM21**	6682.71	-96.06
193	**COM23**	6682.71	-69.06
194	**COM25**	6682.71	-42.06
195	**COM27**	6682.71	-15.06
196	**COM29**	6682.71	11.94
197	**COM31**	6682.71	38.94
198	**COM33**	6682.71	65.94
199	**COM35**	6682.71	92.94
200	**COM37**	6682.71	119.94
201	**COM39**	6682.71	146.94
202	**COM41**	6706.5	302.71
203	**COM43**	6679.5	302.71
204	**COM45**	6652.5	302.71
205	**COM47**	6625.5	302.71
206	**COM49**	6598.5	302.71
207	**COM51**	6571.5	302.71
208	**COM53**	6544.5	302.71
209	**COM55**	6517.5	302.71
210	**COM57**	6490.5	302.71
211	**COM59**	6463.5	302.71
212	**COM61**	6436.5	302.71
213	**COM63**	6409.5	302.71
214	**COM65**	6382.5	302.71
215	**COM67**	6355.5	302.71
216	**COM69**	6328.5	302.71
217	**COM71**	6301.5	302.71
218	**COM73**	6274.5	302.71

219	**COM75**	6247.5	302.71
220	**COM77**	6220.5	302.71
221	**COM79**	6193.5	302.71
222	**COM81**	6166.5	302.71
223	**COM83**	6139.5	302.71
224	**COM85**	6112.5	302.71
225	**COM87**	6085.5	302.71
226	**COM89**	6058.5	302.71
227	**COM91**	6031.5	302.71
228	**COM93**	6004.5	302.71
229	**COM95**	5977.5	302.71
230	**COM97**	5950.5	302.71
231	**COM99**	5923.5	302.71
232	**COM101**	5896.5	302.71
233	**COM103**	5869.5	302.71
234	**COM105**	5842.5	302.71
235	**COM107**	5815.5	302.71
236	**COM109**	5788.5	302.71
237	**COM111**	5761.5	302.71
238	**COM113**	5734.5	302.71
239	**COM115**	5707.5	302.71
240	**COM117**	5680.5	302.71
241	**COM119**	5653.5	302.71
242	**COM121**	5626.5	302.71
243	**COM123**	5599.5	302.71
244	**COM125**	5572.5	302.71
245	**COM127**	5545.5	302.71
246	**COM129**	5518.5	302.71
247	**COM131**	5491.5	302.71
248	**SEG0**	5332.5	302.71
249	**SEG1**	5305.5	302.71
250	**SEG2**	5278.5	302.71
251	**SEG3**	5251.5	302.71
252	**SEG4**	5224.5	302.71
253	**SEG5**	5197.5	302.71
254	**SEG6**	5170.5	302.71
255	**SEG7**	5143.5	302.71

256	**SEG8**	5116.5	302.71
257	**SEG9**	5089.5	302.71
258	**SEG10**	5062.5	302.71
259	**SEG11**	5035.5	302.71
260	**SEG12**	5008.5	302.71
261	**SEG13**	4981.5	302.71
262	**SEG14**	4954.5	302.71
263	**SEG15**	4927.5	302.71
264	**SEG16**	4900.5	302.71
265	**SEG17**	4873.5	302.71
266	**SEG18**	4846.5	302.71
267	**SEG19**	4819.5	302.71
268	**SEG20**	4792.5	302.71
269	**SEG21**	4765.5	302.71
270	**SEG22**	4738.5	302.71
271	**SEG23**	4711.5	302.71
272	**SEG24**	4684.5	302.71
273	**SEG25**	4657.5	302.71
274	**SEG26**	4630.5	302.71
275	**SEG27**	4603.5	302.71
276	**SEG28**	4576.5	302.71
277	**SEG29**	4549.5	302.71
278	**SEG30**	4522.5	302.71
279	**SEG31**	4495.5	302.71
280	**SEG32**	4468.5	302.71
281	**SEG33**	4441.5	302.71
282	**SEG34**	4414.5	302.71
283	**SEG35**	4387.5	302.71
284	**SEG36**	4360.5	302.71
285	**SEG37**	4333.5	302.71
286	**SEG38**	4306.5	302.71
287	**SEG39**	4279.5	302.71
288	**SEG40**	4252.5	302.71
289	**SEG41**	4225.5	302.71
290	**SEG42**	4198.5	302.71
291	**SEG43**	4171.5	302.71
292	**SEG44**	4144.5	302.71

293	**SEG45**	4117.5	302.71
294	**SEG46**	4090.5	302.71
295	**SEG47**	4063.5	302.71
296	**SEG48**	4036.5	302.71
297	**SEG49**	4009.5	302.71
298	**SEG50**	3982.5	302.71
299	**SEG51**	3955.5	302.71
300	**SEG52**	3928.5	302.71
301	**SEG53**	3901.5	302.71
302	**SEG54**	3874.5	302.71
303	**SEG55**	3847.5	302.71
304	**SEG56**	3820.5	302.71
305	**SEG57**	3793.5	302.71
306	**SEG58**	3766.5	302.71
307	**SEG59**	3739.5	302.71
308	**SEG60**	3712.5	302.71
309	**SEG61**	3685.5	302.71
310	**SEG62**	3658.5	302.71
311	**SEG63**	3631.5	302.71
312	**SEG64**	3604.5	302.71
313	**SEG65**	3577.5	302.71
314	**SEG66**	3550.5	302.71
315	**SEG67**	3523.5	302.71
316	**SEG68**	3496.5	302.71
317	**SEG69**	3469.5	302.71
318	**SEG70**	3442.5	302.71
319	**SEG71**	3415.5	302.71
320	**SEG72**	3388.5	302.71
321	**SEG73**	3361.5	302.71
322	**SEG74**	3334.5	302.71
323	**SEG75**	3307.5	302.71
324	**SEG76**	3280.5	302.71
325	**SEG77**	3253.5	302.71
326	**SEG78**	3226.5	302.71
327	**SEG79**	3199.5	302.71
328	**SEG80**	3172.5	302.71
329	**SEG81**	3145.5	302.71

330	**SEG82**	3118.5	302.71
331	**SEG83**	3091.5	302.71
332	**SEG84**	3064.5	302.71
333	**SEG85**	3037.5	302.71
334	**SEG86**	3010.5	302.71
335	**SEG87**	2983.5	302.71
336	**SEG88**	2956.5	302.71
337	**SEG89**	2929.5	302.71
338	**SEG90**	2902.5	302.71
339	**SEG91**	2875.5	302.71
340	**SEG92**	2848.5	302.71
341	**SEG93**	2821.5	302.71
342	**SEG94**	2794.5	302.71
343	**SEG95**	2767.5	302.71
344	**SEG96**	2740.5	302.71
345	**SEG97**	2713.5	302.71
346	**SEG98**	2686.5	302.71
347	**SEG99**	2659.5	302.71
348	**SEG100**	2632.5	302.71
349	**SEG101**	2605.5	302.71
350	**SEG102**	2578.5	302.71
351	**SEG103**	2551.5	302.71
352	**SEG104**	2524.5	302.71
353	**SEG105**	2497.5	302.71
354	**SEG106**	2470.5	302.71
355	**SEG107**	2443.5	302.71
356	**SEG108**	2416.5	302.71
357	**SEG109**	2389.5	302.71
358	**SEG110**	2362.5	302.71
359	**SEG111**	2335.5	302.71
360	**SEG112**	2308.5	302.71
361	**SEG113**	2281.5	302.71
362	**SEG114**	2254.5	302.71
363	**SEG115**	2227.5	302.71
364	**SEG116**	2200.5	302.71
365	**SEG117**	2173.5	302.71
366	**SEG118**	2146.5	302.71

367	**SEG119**	2119.5	302.71
368	**SEG120**	2092.5	302.71
369	**SEG121**	2065.5	302.71
370	**SEG122**	2038.5	302.71
371	**SEG123**	2011.5	302.71
372	**SEG124**	1984.5	302.71
373	**SEG125**	1957.5	302.71
374	**SEG126**	1930.5	302.71
375	**SEG127**	1903.5	302.71
376	**SEG128**	1876.5	302.71
377	**SEG129**	1849.5	302.71
378	**SEG130**	1822.5	302.71
379	**SEG131**	1795.5	302.71
380	**SEG132**	1768.5	302.71
381	**SEG133**	1741.5	302.71
382	**SEG134**	1714.5	302.71
383	**SEG135**	1687.5	302.71
384	**SEG136**	1660.5	302.71
385	**SEG137**	1633.5	302.71
386	**SEG138**	1606.5	302.71
387	**SEG139**	1579.5	302.71
388	**SEG140**	1552.5	302.71
389	**SEG141**	1525.5	302.71
390	**SEG142**	1498.5	302.71
391	**SEG143**	1471.5	302.71
392	**SEG144**	1444.5	302.71
393	**SEG145**	1417.5	302.71
394	**SEG146**	1390.5	302.71
395	**SEG147**	1363.5	302.71
396	**SEG148**	1336.5	302.71
397	**SEG149**	1309.5	302.71
398	**SEG150**	1282.5	302.71
399	**SEG151**	1255.5	302.71
400	**SEG152**	1228.5	302.71
401	**SEG153**	1201.5	302.71
402	**SEG154**	1174.5	302.71
403	**SEG155**	1147.5	302.71

404	**SEG156**	1120.5	302.71
405	**SEG157**	1093.5	302.71
406	**SEG158**	1066.5	302.71
407	**SEG159**	1039.5	302.71
408	**SEG160**	1012.5	302.71
409	**SEG161**	985.5	302.71
410	**SEG162**	958.5	302.71
411	**SEG163**	931.5	302.71
412	**SEG164**	904.5	302.71
413	**SEG165**	877.5	302.71
414	**SEG166**	850.5	302.71
415	**SEG167**	823.5	302.71
416	**SEG168**	796.5	302.71
417	**SEG169**	769.5	302.71
418	**SEG170**	742.5	302.71
419	**SEG171**	715.5	302.71
420	**SEG172**	688.5	302.71
421	**SEG173**	661.5	302.71
422	**SEG174**	634.5	302.71
423	**SEG175**	607.5	302.71
424	**SEG176**	580.5	302.71
425	**SEG177**	553.5	302.71
426	**SEG178**	526.5	302.71
427	**SEG179**	499.5	302.71
428	**SEG180**	472.5	302.71
429	**SEG181**	445.5	302.71
430	**SEG182**	418.5	302.71
431	**SEG183**	391.5	302.71
432	**SEG184**	364.5	302.71
433	**SEG185**	337.5	302.71
434	**SEG186**	310.5	302.71
435	**SEG187**	283.5	302.71
436	**SEG188**	256.5	302.71
437	**SEG189**	229.5	302.71
438	**SEG190**	202.5	302.71
439	**SEG191**	175.5	302.71
440	**SEG192**	148.5	302.71

441	**SEG193**	121.5	302.71
442	**SEG194**	94.5	302.71
443	**SEG195**	67.5	302.71
444	**SEG196**	40.5	302.71
445	**SEG197**	13.5	302.71
446	**SEG198**	-13.5	302.71
447	**SEG199**	-40.5	302.71
448	**SEG200**	-67.5	302.71
449	**SEG201**	-94.5	302.71
450	**SEG202**	-121.5	302.71
451	**SEG203**	-148.5	302.71
452	**SEG204**	-175.5	302.71
453	**SEG205**	-202.5	302.71
454	**SEG206**	-229.5	302.71
455	**SEG207**	-256.5	302.71
456	**SEG208**	-283.5	302.71
457	**SEG209**	-310.5	302.71
458	**SEG210**	-337.5	302.71
459	**SEG211**	-364.5	302.71
460	**SEG212**	-391.5	302.71
461	**SEG213**	-418.5	302.71
462	**SEG214**	-445.5	302.71
463	**SEG215**	-472.5	302.71
464	**SEG216**	-499.5	302.71
465	**SEG217**	-526.5	302.71
466	**SEG218**	-553.5	302.71
467	**SEG219**	-580.5	302.71
468	**SEG220**	-607.5	302.71
469	**SEG221**	-634.5	302.71
470	**SEG222**	-661.5	302.71
471	**SEG223**	-688.5	302.71
472	**SEG224**	-715.5	302.71
473	**SEG225**	-742.5	302.71
474	**SEG226**	-769.5	302.71
475	**SEG227**	-796.5	302.71
476	**SEG228**	-823.5	302.71
477	**SEG229**	-850.5	302.71

478	**SEG230**	-877.5	302.71
479	**SEG231**	-904.5	302.71
480	**SEG232**	-931.5	302.71
481	**SEG233**	-958.5	302.71
482	**SEG234**	-985.5	302.71
483	**SEG235**	-1012.5	302.71
484	**SEG236**	-1039.5	302.71
485	**SEG237**	-1066.5	302.71
486	**SEG238**	-1093.5	302.71
487	**SEG239**	-1120.5	302.71
488	**SEG240**	-1147.5	302.71
489	**SEG241**	-1174.5	302.71
490	**SEG242**	-1201.5	302.71
491	**SEG243**	-1228.5	302.71
492	**SEG244**	-1255.5	302.71
493	**SEG245**	-1282.5	302.71
494	**SEG246**	-1309.5	302.71
495	**SEG247**	-1336.5	302.71
496	**SEG248**	-1363.5	302.71
497	**SEG249**	-1390.5	302.71
498	**SEG250**	-1417.5	302.71
499	**SEG251**	-1444.5	302.71
500	**SEG252**	-1471.5	302.71
501	**SEG253**	-1498.5	302.71
502	**SEG254**	-1525.5	302.71
503	**SEG255**	-1552.5	302.71
504	**SEG256**	-1579.5	302.71
505	**SEG257**	-1606.5	302.71
506	**SEG258**	-1633.5	302.71
507	**SEG259**	-1660.5	302.71
508	**SEG260**	-1687.5	302.71
509	**SEG261**	-1714.5	302.71
510	**SEG262**	-1741.5	302.71
511	**SEG263**	-1768.5	302.71
512	**SEG264**	-1795.5	302.71
513	**SEG265**	-1822.5	302.71
514	**SEG266**	-1849.5	302.71

515	**SEG267**	-1876.5	302.71
516	**SEG268**	-1903.5	302.71
517	**SEG269**	-1930.5	302.71
518	**SEG270**	-1957.5	302.71
519	**SEG271**	-1984.5	302.71
520	**SEG272**	-2011.5	302.71
521	**SEG273**	-2038.5	302.71
522	**SEG274**	-2065.5	302.71
523	**SEG275**	-2092.5	302.71
524	**SEG276**	-2119.5	302.71
525	**SEG277**	-2146.5	302.71
526	**SEG278**	-2173.5	302.71
527	**SEG279**	-2200.5	302.71
528	**SEG280**	-2227.5	302.71
529	**SEG281**	-2254.5	302.71
530	**SEG282**	-2281.5	302.71
531	**SEG283**	-2308.5	302.71
532	**SEG284**	-2335.5	302.71
533	**SEG285**	-2362.5	302.71
534	**SEG286**	-2389.5	302.71
535	**SEG287**	-2416.5	302.71
536	**SEG288**	-2443.5	302.71
537	**SEG289**	-2470.5	302.71
538	**SEG290**	-2497.5	302.71
539	**SEG291**	-2524.5	302.71
540	**SEG292**	-2551.5	302.71
541	**SEG293**	-2578.5	302.71
542	**SEG294**	-2605.5	302.71
543	**SEG295**	-2632.5	302.71
544	**SEG296**	-2659.5	302.71
545	**SEG297**	-2686.5	302.71
546	**SEG298**	-2713.5	302.71
547	**SEG299**	-2740.5	302.71
548	**SEG300**	-2767.5	302.71
549	**SEG301**	-2794.5	302.71
550	**SEG302**	-2821.5	302.71
551	**SEG303**	-2848.5	302.71

552	**SEG304**	-2875.5	302.71
553	**SEG305**	-2902.5	302.71
554	**SEG306**	-2929.5	302.71
555	**SEG307**	-2956.5	302.71
556	**SEG308**	-2983.5	302.71
557	**SEG309**	-3010.5	302.71
558	**SEG310**	-3037.5	302.71
559	**SEG311**	-3064.5	302.71
560	**SEG312**	-3091.5	302.71
561	**SEG313**	-3118.5	302.71
562	**SEG314**	-3145.5	302.71
563	**SEG315**	-3172.5	302.71
564	**SEG316**	-3199.5	302.71
565	**SEG317**	-3226.5	302.71
566	**SEG318**	-3253.5	302.71
567	**SEG319**	-3280.5	302.71
568	**SEG320**	-3307.5	302.71
569	**SEG321**	-3334.5	302.71
570	**SEG322**	-3361.5	302.71
571	**SEG323**	-3388.5	302.71
572	**SEG324**	-3415.5	302.71
573	**SEG325**	-3442.5	302.71
574	**SEG326**	-3469.5	302.71
575	**SEG327**	-3496.5	302.71
576	**SEG328**	-3523.5	302.71
577	**SEG329**	-3550.5	302.71
578	**SEG330**	-3577.5	302.71
579	**SEG331**	-3604.5	302.71
580	**SEG332**	-3631.5	302.71
581	**SEG333**	-3658.5	302.71
582	**SEG334**	-3685.5	302.71
583	**SEG335**	-3712.5	302.71
584	**SEG336**	-3739.5	302.71
585	**SEG337**	-3766.5	302.71
586	**SEG338**	-3793.5	302.71
587	**SEG339**	-3820.5	302.71
588	**SEG340**	-3847.5	302.71

589	**SEG341**	-3874.5	302.71
590	**SEG342**	-3901.5	302.71
591	**SEG343**	-3928.5	302.71
592	**SEG344**	-3955.5	302.71
593	**SEG345**	-3982.5	302.71
594	**SEG346**	-4009.5	302.71
595	**SEG347**	-4036.5	302.71
596	**SEG348**	-4063.5	302.71
597	**SEG349**	-4090.5	302.71
598	**SEG350**	-4117.5	302.71
599	**SEG351**	-4144.5	302.71
600	**SEG352**	-4171.5	302.71
601	**SEG353**	-4198.5	302.71
602	**SEG354**	-4225.5	302.71
603	**SEG355**	-4252.5	302.71
604	**SEG356**	-4279.5	302.71
605	**SEG357**	-4306.5	302.71
606	**SEG358**	-4333.5	302.71
607	**SEG359**	-4360.5	302.71
608	**SEG360**	-4387.5	302.71
609	**SEG361**	-4414.5	302.71
610	**SEG362**	-4441.5	302.71
611	**SEG363**	-4468.5	302.71
612	**SEG364**	-4495.5	302.71
613	**SEG365**	-4522.5	302.71
614	**SEG366**	-4549.5	302.71
615	**SEG367**	-4576.5	302.71
616	**SEG368**	-4603.5	302.71
617	**SEG369**	-4630.5	302.71
618	**SEG370**	-4657.5	302.71
619	**SEG371**	-4684.5	302.71
620	**SEG372**	-4711.5	302.71
621	**SEG373**	-4738.5	302.71
622	**SEG374**	-4765.5	302.71
623	**SEG375**	-4792.5	302.71
624	**SEG376**	-4819.5	302.71
625	**SEG377**	-4846.5	302.71

626	**SEG378**	-4873.5	302.71
627	**SEG379**	-4900.5	302.71
628	**SEG380**	-4927.5	302.71
629	**SEG381**	-4954.5	302.71
630	**SEG382**	-4981.5	302.71
631	**SEG383**	-5008.5	302.71
632	**SEG384**	-5035.5	302.71
633	**SEG385**	-5062.5	302.71
634	**SEG386**	-5089.5	302.71
635	**SEG387**	-5116.5	302.71
636	**SEG388**	-5143.5	302.71
637	**SEG389**	-5170.5	302.71
638	**SEG390**	-5197.5	302.71
639	**SEG391**	-5224.5	302.71
640	**SEG392**	-5251.5	302.71
641	**SEG393**	-5278.5	302.71
642	**SEG394**	-5305.5	302.71
643	**SEG395**	-5332.5	302.71
644	**COM130**	-5491.5	302.71
645	**COM128**	-5518.5	302.71
646	**COM126**	-5545.5	302.71
647	**COM124**	-5572.5	302.71
648	**COM122**	-5599.5	302.71
649	**COM120**	-5626.5	302.71
650	**COM118**	-5653.5	302.71
651	**COM116**	-5680.5	302.71
652	**COM114**	-5707.5	302.71
653	**COM112**	-5734.5	302.71
654	**COM110**	-5761.5	302.71
655	**COM108**	-5788.5	302.71
656	**COM106**	-5815.5	302.71
657	**COM104**	-5842.5	302.71
658	**COM102**	-5869.5	302.71
659	**COM100**	-5896.5	302.71
660	**COM98**	-5923.5	302.71
661	**COM96**	-5950.5	302.71
662	**COM94**	-5977.5	302.71

663	**COM92**	-6004.5	302.71
664	**COM90**	-6031.5	302.71
665	**COM88**	-6058.5	302.71
666	**COM86**	-6085.5	302.71
667	**COM84**	-6112.5	302.71
668	**COM82**	-6139.5	302.71
669	**COM80**	-6166.5	302.71
670	**COM78**	-6193.5	302.71
671	**COM76**	-6220.5	302.71
672	**COM74**	-6247.5	302.71
673	**COM72**	-6274.5	302.71
674	**COM70**	-6301.5	302.71
675	**COM68**	-6328.5	302.71
676	**COM66**	-6355.5	302.71
677	**COM64**	-6382.5	302.71
678	**COM62**	-6409.5	302.71
679	**COM60**	-6436.5	302.71
680	**COM58**	-6463.5	302.71
681	**COM56**	-6490.5	302.71
682	**COM54**	-6517.5	302.71
683	**COM52**	-6544.5	302.71
684	**COM50**	-6571.5	302.71
685	**COM48**	-6598.5	302.71
686	**COM46**	-6625.5	302.71
687	**COM44**	-6652.5	302.71
688	**COM42**	-6679.5	302.71
689	**COM40**	-6706.5	302.71
690	**L-Mark-L(Left)**	-5440.21	350.72
691	**L-Mark-R(Right)**	5440.21	350.72
692	**L-Mark-B(Bottom)**	6542.56	-160.81

5. Block diagram

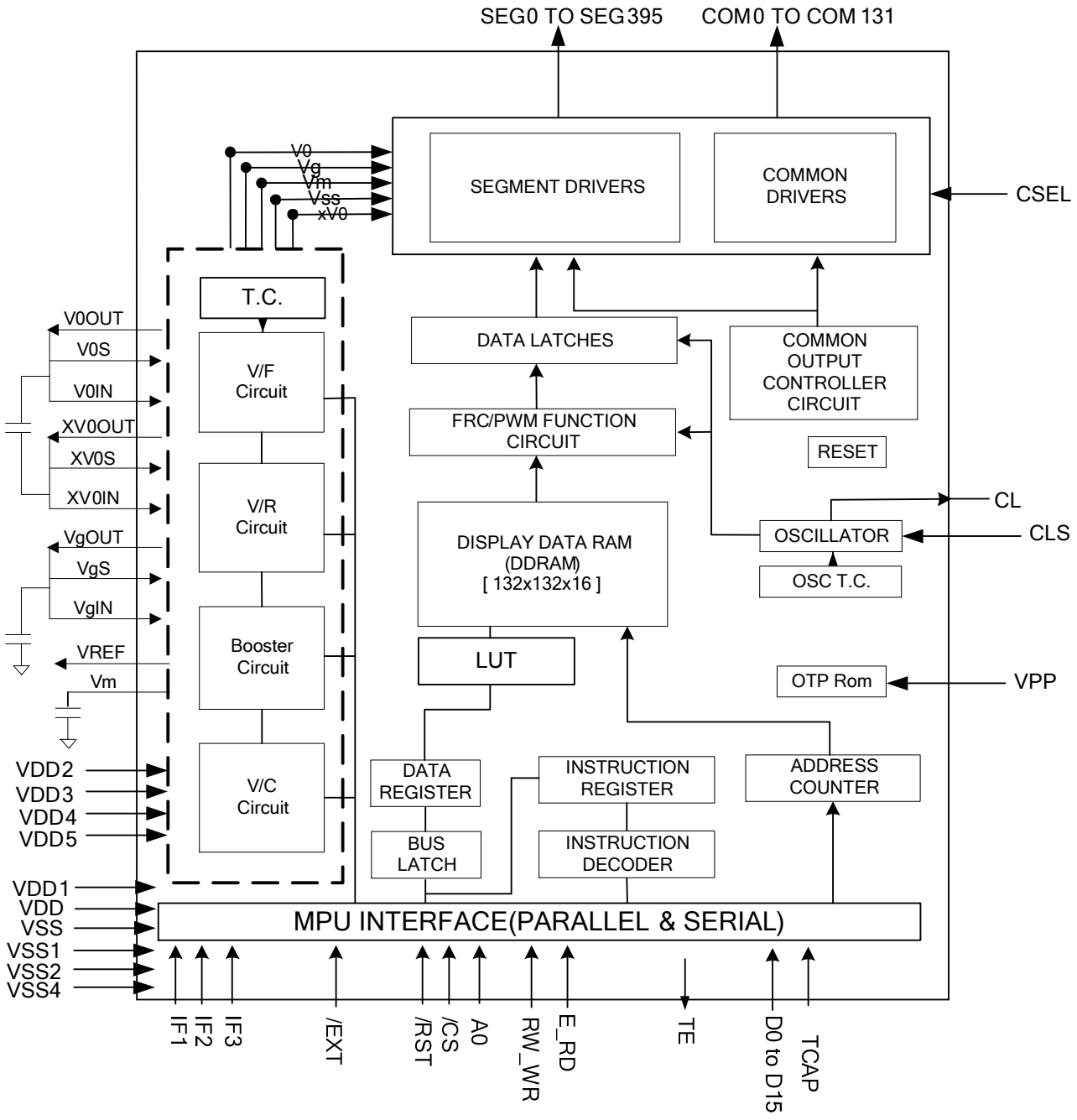

6. PIN DESCRIPTION

6.1 Power Supply

Name	I/O	Description
VDD	Supply	Power supply for logic circuit.
VDD1	Supply	Power supply for OSC circuit.
VDD2	Supply	Power supply for Booster circuit.
VDD3	Supply	Power supply for LCD.
VDD4	Supply	Power supply for LCD.
VDD5	Supply	Power supply for LCD.
VSS	Supply	Ground for logic circuit. Ground system should be connected together.
VSS1	Supply	Ground for OSC circuit. Ground system should be connected together.
VSS2	Supply	Ground for Booster circuit. Ground system should be connected together.
VSS4	Supply	Ground for LCD. Ground system should be connected together.

6.2 LCD Power Supply Pins

Name	I/O	Description
$V0_{OUT}$ $V0_{IN}$ $V0_S$	I/O	Positive LCD driver supply voltages. $V0_{OUT}$ is the output voltage of V0 generated by ST7637. $V0_{IN}$ is the input pin of power supply to generate V0 voltage for LCD. $V0_S$ is the input pin of power supply to sense the V0 voltage. $V0_{OUT}$ 、$V0_{IN}$ & $V0_S$ should be connected together by FPC.
$XV0_{OUT}$ $XV0_{IN}$ $XV0_S$	I/O	Negative LCD driver supply voltages. $XV0_{OUT}$ is the output voltage of XV0 generated by ST7637. $XV0_{IN}$ is the input pin of power supply to generate XV0 voltage for LCD. $XV0_S$ is the input pin of power supply to sense the XV0 voltage. $XV0_{OUT}$ 、$XV0_{IN}$ & $XV0_S$ should be connected together by FPC.
Vg_{OUT} Vg_{IN} Vg_S Vm	I/O	Bias LCD driver supply voltages. Vg_{OUT} is the output voltage of Vg generated by ST7637. Vg_{IN} is the input pin of power supply to generate Vg voltage for LCD. Vg_S is the input pin of power supply to sense the Vg voltage. Vg_{OUT} 、Vg_{IN} & Vg_S should be connected together by FPC. Vm is the I/O pin of LCD bias supply voltage Voltages should have the following relationship; V0 ＞ Vg ＞ Vm ＞ VSS ＞ XV0. VDDA-0.7V＞Vm＞0.7V. VddA <3V:2 x VDDA≧Vg≧3V ; VddA ≧3V:2 x VDDA≧Vg>1.8V When the internal power circuit is active, these voltages are generated as following table according to the state of LCD bias. **LCD bias** | **Vg** | **Vm** **1/N bias** | (2/N) x V0 | (1/N) x V0 NOTE: N = 5 to 12

6.3 System Control

Name	I/O	Description
CLS	I	Reserve for testing only. Please fix this pin to VDDI.
CL	I/O	Reserve for testing only. Leave this pin open.
CSEL	I	This pin should connect to VDDI.
TCAP	I/O	Test pin. Left it opens.
VREF	O	Reference voltage output for monitor only. Left it opened.
VPP	I	When writing OTP, it needs external power supply voltage 7.5V~7.75V input to write successfully.

6.4 Microprocessor Interface

<table>
<tr><th>Name</th><th>I/O</th><th>Description</th></tr>
<tr><td>/RST</td><td>I</td><td>Reset input pin
When /RST is “L”, initialization is executed.</td></tr>
<tr><td>IF[3:1]</td><td>I</td><td>Parallel / Serial data input select input
<table>
<tr><th>IF3</th><th>IF2</th><th>IF1</th><th>MPU interface type</th></tr>
<tr><td>H</td><td>H</td><td>H</td><td>80 series 16-bit parallel</td></tr>
<tr><td>H</td><td>H</td><td>L</td><td>80 series 8-bit parallel</td></tr>
<tr><td>H</td><td>L</td><td>H</td><td>68 series 16-bit parallel</td></tr>
<tr><td>H</td><td>L</td><td>L</td><td>68 series 8-bit parallel</td></tr>
<tr><td>L</td><td>H</td><td>H</td><td>8-bit serial (4 line)</td></tr>
<tr><td>L</td><td>H</td><td>L</td><td>9-bit serial (3 line)</td></tr>
</table>
Note:
Refer to Table 7.2-1 for detail interface connections.</td></tr>
<tr><td>/CS</td><td>I</td><td>Chip select input pins
Data / Instruction I/O is enabled only when /CS is "L". When chip select is non-active, D0 to D15 become high impedance.</td></tr>
<tr><td>A0</td><td>I</td><td>Register select input pin
In parallel interface:
A0 = "H": D0 to D15 or SI are display data
A0 = "L": D0 to D15 or SI are control Command
In 3-line/4-line interface:
This pad will be used for SCL function.</td></tr>
</table>

<table>
<tr><td>RW_WR</td><td>I</td><td>RW_WR pin is only used in parallel interface.
<table>
<tr><th>MPU type</th><th>RW_WR</th><th>Description</th></tr>
<tr><td>6800-series</td><td>RW</td><td>Read / Write control input pin
Write status: RW = “L”.
Read status: RW = “H”.</td></tr>
<tr><td>8080-series</td><td>/WR</td><td>Write enable clock input pin
The data on D0 to D15 are latched at the rising edge of the /WR signal.</td></tr>
</table>
When in the serial interface, connect it to VDDI.</td></tr>
<tr><td>E_RD</td><td>I</td><td>E_RD pin is only used in parallel interface.
<table>
<tr><th>MPU Type</th><th>E_RD</th><th>Description</th></tr>
<tr><td>6800-series</td><td>E</td><td>Enable clock pin:
Write status: The data on D0 to D15 are latched at the falling edge of the E signal.
Read status: The data on D0 to D15 are latched at the rising edge of the E signal.</td></tr>
<tr><td>8080-series</td><td>/RD</td><td>Read enable clock input pin
The data on D0 to D15 are latched at the falling edge of the /WR signal.</td></tr>
</table>
When in the serial interface, connect it to VDDI.</td></tr>
<tr><td>D15 to D0</td><td>I/O</td><td>They connect to the standard 8-bit or 16 bit MPU bus via the 8/16 –bit bi-directional bus.
When the following interface is selected and the /CS pin is high, the following pins become high impedance.
1. In 8-bit parallel: D15-D8 pins are in the state of high impedance should connect to VDDI.
2. In 3-line/4-line interface D0 pad will be used for SI function
3. In 4-line interface D1 pad will be used for A0 function
4. In Serial interface: unused pins are in the state of high impedance should connect to VDDI.</td></tr>
<tr><td>SI</td><td>I</td><td>SI is used to input serial data when the serial interface is selected.(3 line and 4 line)
It is used by “D0” pad, See Table 7.2-1.</td></tr>
<tr><td>SCL</td><td>I</td><td>SCL is used to input serial clock when the serial interface is selected.
The data is converted in the rising edge. (3 line and 4 line)
It is used by “A0” pad , See Table 7.2-1.</td></tr>
<tr><td>TE</td><td>O</td><td>Tearing effect output.</td></tr>
</table>

/EXT	I	OTP burn-in control Pin. There is a pull-high resistor between /EXT & VDD in ST7637. When burning OTP, please add an external VSS on /EXT. (needs external power supply voltage VPP=7.5V~7.75V)

NOTE:

1. Microprocessor interface pins should not be floating in any operation mode.
2. Unused pin should connect to VDDI (Supply Digital Voltage).

6.5 LCD DRIVER OUTPUTS

<table>
<tr><th>Name</th><th>I/O</th><th>Description</th></tr>
<tr><td>SEG0
to
SEG395</td><td>O</td><td>LCD segment driver outputs
The display data and the M signal control the output voltage of segment driver.
<table>
<tr><th rowspan="2">Display data</th><th rowspan="2">M (Internal)</th><th colspan="2">Segment driver output voltage</th></tr>
<tr><th>Normal display</th><th>Reverse display</th></tr>
<tr><td>H</td><td>H</td><td>Vg</td><td>VSS</td></tr>
<tr><td>H</td><td>L</td><td>VSS</td><td>Vg</td></tr>
<tr><td>L</td><td>H</td><td>VSS</td><td>Vg</td></tr>
<tr><td>L</td><td>L</td><td>Vg</td><td>VSS</td></tr>
<tr><td colspan="2">Sleep-In mode</td><td>VSS</td><td>VSS</td></tr>
</table></td></tr>
<tr><td>COM0
to
COM131</td><td>O</td><td>LCD common driver outputs
The internal scanning data and M signal control the output voltage of common driver.
<table>
<tr><th>Scan data</th><th>M (Internal)</th><th>Common driver output voltage</th></tr>
<tr><td>H</td><td>H</td><td>XV0</td></tr>
<tr><td>H</td><td>L</td><td>V0</td></tr>
<tr><td>L</td><td>H</td><td>Vm</td></tr>
<tr><td>L</td><td>L</td><td>Vm</td></tr>
<tr><td colspan="2">Sleep-In mode</td><td>VSS</td></tr>
</table></td></tr>
</table>

Name	I/O	Description
DETGBI DETGBO	ITO	DETGBI must connect to DETGBO by ITO which run a ring on LCM glass.

Driving Waveform

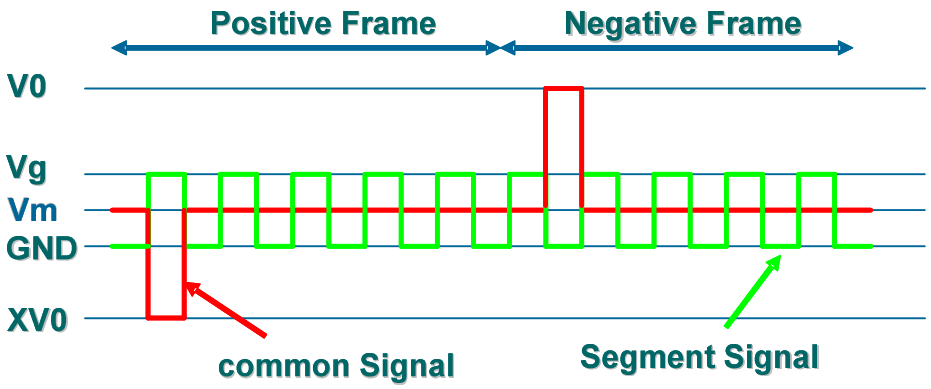

ST7637 I/O PIN ITO Resister Limitation

Pin Name	ITO Resister
VDD, VDD1~VDD5, VSS,VSS1,VSS2,VSS4,SI(in serial interface is D0)	<100Ω
$V0_{IN}$, $V0_{OUT}$, $V0_S$,$XV0_{IN}$, $XV0_{OUT}$,$XV0_S$, Vg_{IN}, Vg_{OUT} ,Vg_S ,Vm	<300Ω
VPP	<50Ω
A0, E_RD, RW_WR, /CS, D0(in parellel interface),D1, …D15, (SCL), TE	<1KΩ
/RST	<10KΩ
IF[3:1], CLS, CSEL, /EXT	<1KΩ
TCAP, CL, VREF	Floating

NOTE:

1. Make sure that the ITO resistance of COM0 ~ COM131 is equal, and so is it of SEG0 ~ SEG395.

These limitations include the bottleneck of ITO layout.

2. ITO layout suggestion is shown as below:

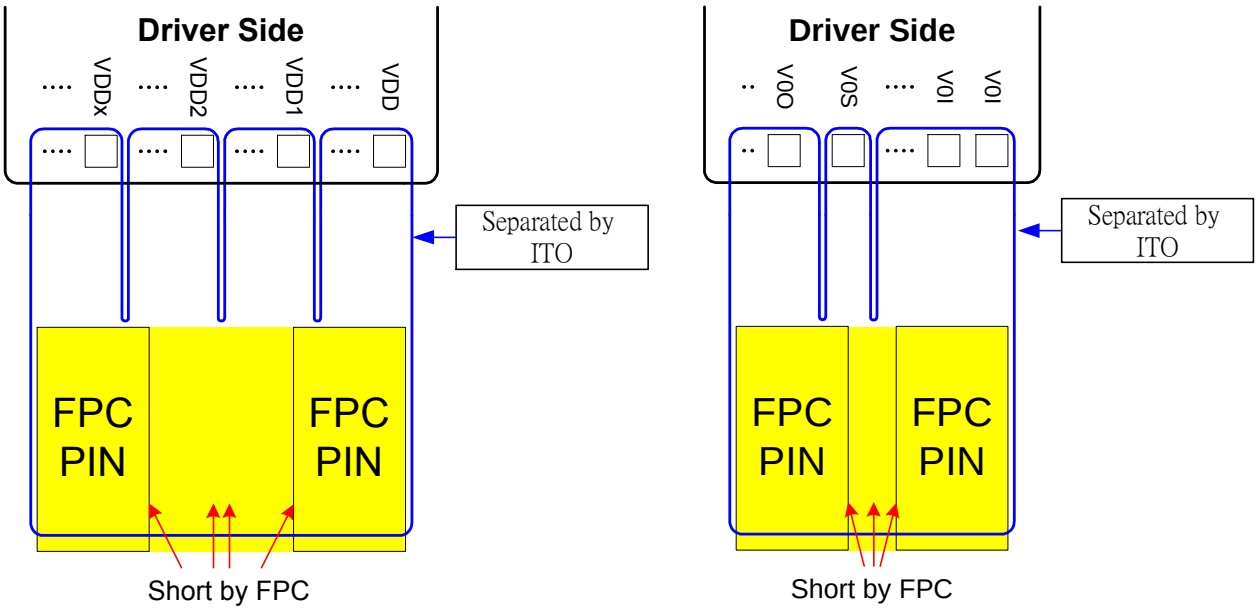

7. FUNCTIONAL DESCRIPTION

7.1 MICROPROCESSOR INTERFACE

Chip Select Input

/CS pin is chip selection. The ST7637 is active when /CS=L. In serial interface mode, the internal shift register and the counter are reset when /CS=H.

7.2 Selecting Parallel / Serial Interface

ST7637 has six types of interfaces with an MPU, which are two serial and four parallel interfaces. These parallel or serial interfaces are determined by IF pin as shown in Table 7.2-1.

I/F Mode			I/F Description	Pin Assignment						
IF3	IF2	IF1		/CS	A0	E_RD	RW_WR	Used Data Bus	D1	D0
H	H	H	80 serial 16-bit parallel	/CS	A0	/RD	/WR	D15~D2	D1	D0
H	H	L	80 serial 8-bit parallel	/CS	A0	/RD	/WR	D7~D2	D1	D0
H	L	H	68 serial 16-bit parallel	/CS	A0	E	R/W	D15~D2	D1	D0
H	L	L	68 serial 8-bit parallel	/CS	A0	E	R/W	D7~D2	D1	D0
L	H	H	8-bit SPI mode (4 line)	/CS	SCL	--	--	--	A0	SI
L	H	L	9-bit SPI mode (3 line)	/CS	SCL	--	--	--	--	SI

Table 7.2-1 Parallel / Serial Interface Mode

NOTE: When these pins are set to any other combination, A0, E_RD and RW_WR inputs are disabled and D0 to D15 are to be high impedance.

7.2.1. 8-bit or 16-bit Parallel Interface

The ST7637 identifies the type of the data bus signals according to the combination of A0, /RD (E) and /WR (W/R) signals, as shown in Table 7.2-2.

Common	6800-series		8080-series		Description
A0	RW	E	/WR	/RD	
H	H	↑	H	↓	Display data read out
H	H	↑	H	↓	Register status read
L	L	↓	↑	H	Instruction write
H	L	↓	↑	H	Display data write

Table 7.2-2 Parallel Data Transfer

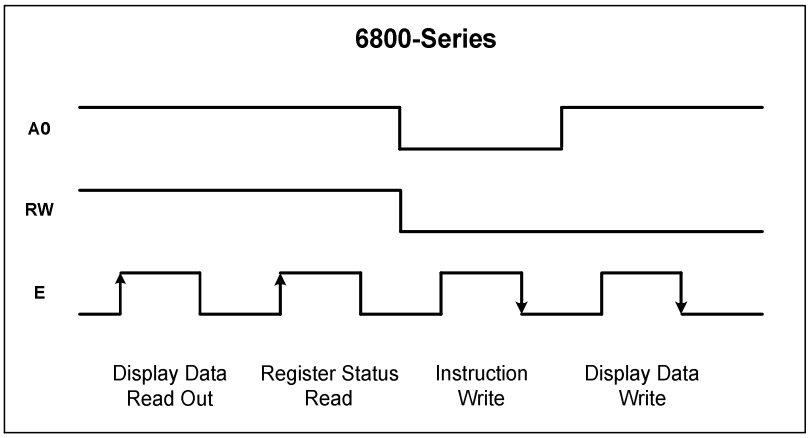

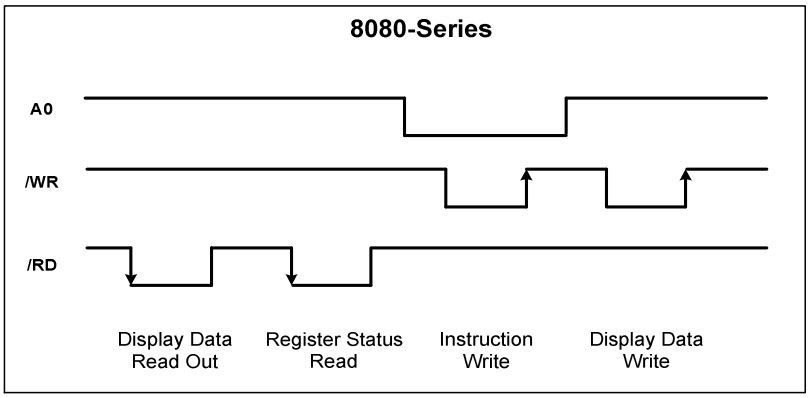

Figure 7.2-3 Parallel Data Transfer Example Chart

Relation between Data Bus and Gradation Data

ST7637 offers 256 color, 4096 color display, 65K color display, and truncated 262K color display, truncated 16M color display. When using 256 colors, 4096, 65K, 262K, and 16M color display; you can specify color for each of R, G, and B using the palette function. Use the command for switching between these modes.

(1) 256 color input mode

1. 8-bit interface

D7, D6, D5, D4, D3, D2, D1, D0: RRRGGGBB 1st -write

There is only 1 write operation for 1 pixel data.

1 pixel data is written in the display data RAM when 1st -write operation finishes.

(2) 4096-color display

(1-1) Type A 4096 color display

1. 8-bit mode

D7, D6, D5, D4, D3, D2, D1, D0: RRRRGGGG 1st-write

D7, D6, D5, D4, D3, D2, D1, D0: BBBBRRRR 2nd-write

D7, D6, D5, D4, D3, D2, D1, D0: GGGGBBBB 3rd-write

There are 3 write operations for 2 pixel data.

1st pixel data is written in the display data RAM when 2nd –write operation finishes, and 2nd pixel data is written in the display data RAM when 3rd–write operation finishes.

2. 16-bit mode

D15, D14, D13, D12, D11, D10, D9, D8, D7, D6, D5, D4, D3, D2, D1, D0: RRRRGGGGBBBBXXXX 1st-write

There is only 1 write operation for 1 pixel data.

1 pixel data is written in the display data RAM when 1st –write operation finishes. “X” are ignored dummy bits.

(1-2) Type B 4096 color display

1. 8-bit mode

D7, D6, D5, D4, D3, D2, D1, D0: XXXXRRRR 1st-write

D7, D6, D5, D4, D3, D2, D1, D0: GGGGBBBB 2nd-write

There are 2 write operations for 1 pixel data.

1st pixel data is written in the display data RAM when 2nd –write operation finishes. “X” are ignored dummy bits.

2. 16-bit mode

D15, D14, D13, D12, D11, D10, D9, D8, D7, D6, D5, D4, D3, D2, D1, D0: XXXXRRRRGGGGBBBB 1st-write

There is only 1 write operation for 1 pixel data.

1 pixel data is written in the display data RAM when 1st –write operation finishes. “X” are ignored dummy bits.

(3) 65K color input mode

1. 8-bit mode

D7, D6, D5, D4, D3, D2, D1, D0: RRRRRGGG 1st-write

D7, D6, D5, D4, D3, D2, D1, D0: GGGBBBBB 2nd-write

There are 2 write operations for 1 pixel data.

1st pixel data is written in the display data RAM when 2nd –write operation finishes.

2. 16-bit mode

D15, D14, D13, D12, D11, D10, D9, D8, D7, D6, D5, D4, D3, D2, D1, D0: RRRRRGGGGGGBBBBB

There is only 1 write operation for 1 pixel data.

1 pixel data is written in the display data RAM when 1st –write operation finishes.

(4) Truncated 262K color input mode

1. 8-bit mode

D7, D6, D5, D4, D3, D2, D1, D0: RRRRRRXX 1st-write

D7, D6, D5, D4, D3, D2, D1, D0: GGGGGGXX 2nd-write

D7, D6, D5, D4, D3, D2, D1, D0: BBBBBBXX 3rd-write

There are 3 write operations for 1 pixel data.

1st pixel data is written in the display data RAM when 3rd–write operation finishes. “X” are ignored dummy bits.

2. 16 bit mode

D15, D14, D13, D12, D11, D10, D9, D8, D7, D6, D5, D4, D3, D2, D1, D0: RRRRRRXXGGGGGGXX 1st-write

D15, D14, D13, D12, D11, D10, D9, D8, D7, D6, D5, D4, D3, D2, D1, D0: BBBBBBXXXXXXXXXXXX 2nd-write

There are 2 write operations for 1 pixel data.

1st pixel data is written in the display data RAM when 2nd –write operation finishes. “X” are ignored dummy bits.

(5) Truncated 16M color input mode

1. 8-bit mode

D7, D6, D5, D4, D3, D2, D1, D0: RRRRRRRR 1st-write

D7, D6, D5, D4, D3, D2, D1, D0: GGGGGGGG 2nd-write

D7, D6, D5, D4, D3, D2, D1, D0: BBBBBBBB 3rd-write

There are 3 write operations for 1 pixel data.

1st pixel data is written in the display data RAM when 3rd–write operation finishes. “X” are ignored dummy bits.

2. 16 bit mode

D15, D14, D13, D12, D11, D10, D9, D8, D7, D6, D5, D4, D3, D2, D1, D0: RRRRRRRRGGGGGGGG 1st-write

D15, D14, D13, D12, D11, D10, D9, D8, D7, D6, D5, D4, D3, D2, D1, D0: BBBBBBBBXXXXXXXX 2nd-write

There are 2 write operations for 1 pixel data.

1st pixel data is written in the display data RAM when 2nd –write operation finishes. “X” are ignored dummy bits.

NOTE: 7637 offer read DDRAM function only in 65K color mode.

7.2.2. 8- and 9-bit Serial Interface

The 8-bit serial interface uses four pins /CS, SI, SCL, and A0 to write in commands and data. Meanwhile, the 9-bit serial interface uses three pins /CS, SI and SCL for the same purpose.

Data read is not available in the serial interface. Data must write to IC with 8 bits for each time. The relation between gray-scale data and data bus in the serial input is the same as that in the 8-bit parallel interface mode at every gradation.

(1) 8-bit serial interface (4-line)

When entering data (parameters): A0= HIGH at the rising edge of the 8th SCL.

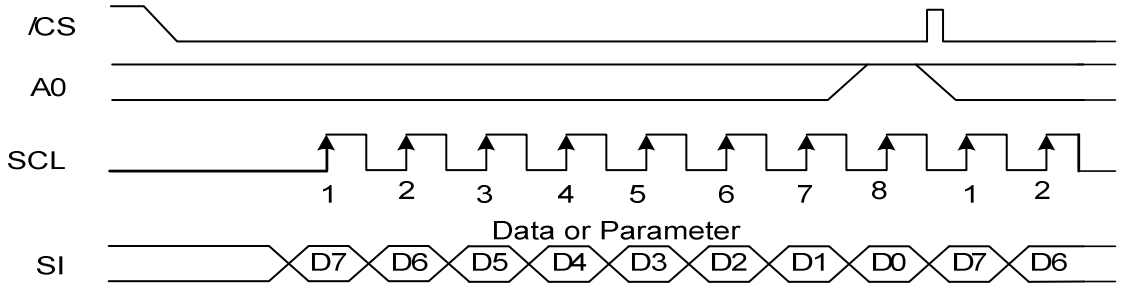

When entering command: A0= LOW at the rising edge of the 8th SCL

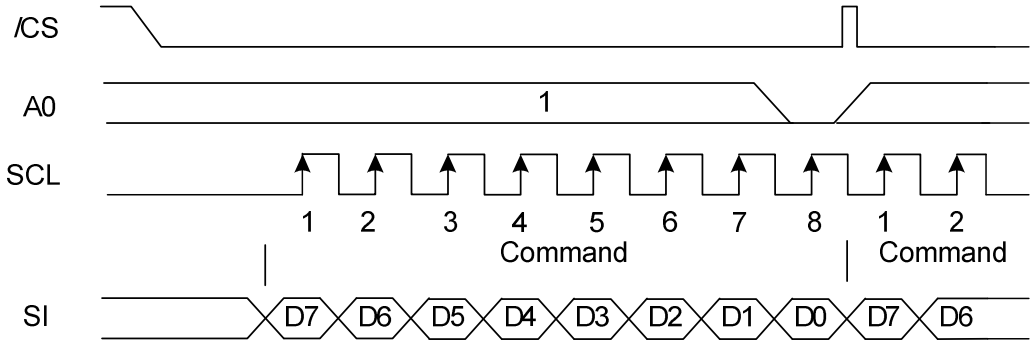

When entering reading command:

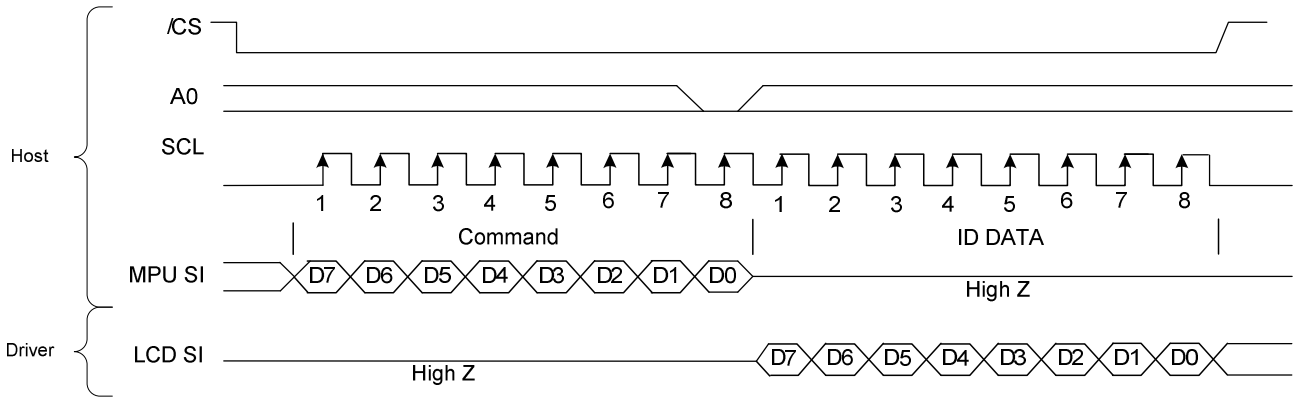

(2) 9-bit serial interface (3-line)

When entering data (parameters): SI= HIGH at the rising edge of the 1st SCL.

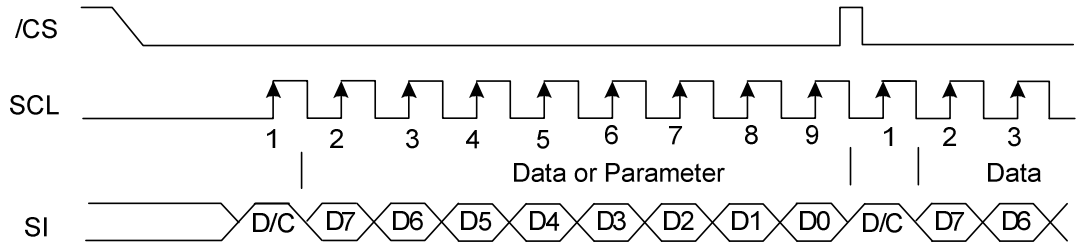

When entering command: SI= LOW at the rising edge of the 1st SCL.

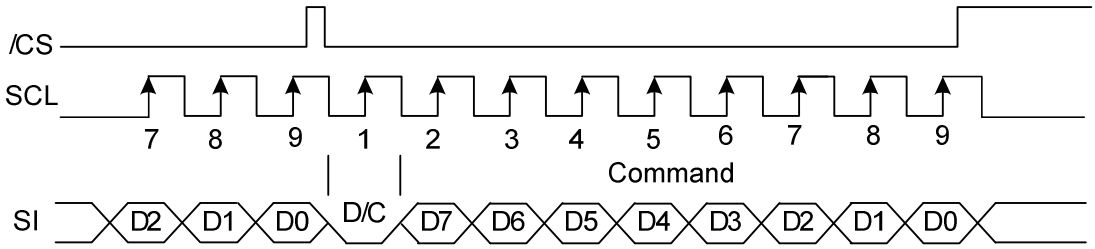

When entering reading command:

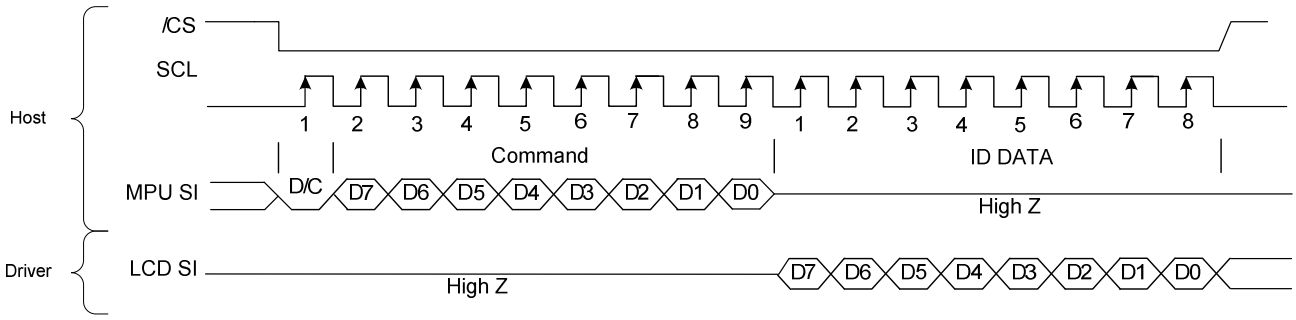

- If /CS is set to HIGH while the 8 bits from D7 to D0 are entered, the data concerned is invalidated. Before entering succeeding sets of data, you must correctly input the data concerned again.
- In order to avoid data transfer error due to incoming noise, it is recommended to set /CS at HIGH on byte basis to initialize the serial-to-parallel conversion counter and the register.

7.2.3. 8-bit and 9-bit Serial Interface Data Color Coding

8-bit serial interface (4-line)

(1) R 3-bit, G 3-bit, B 2-bit, 256 colors

There is 1 pixel (= 3 sub-pixels) per byte.

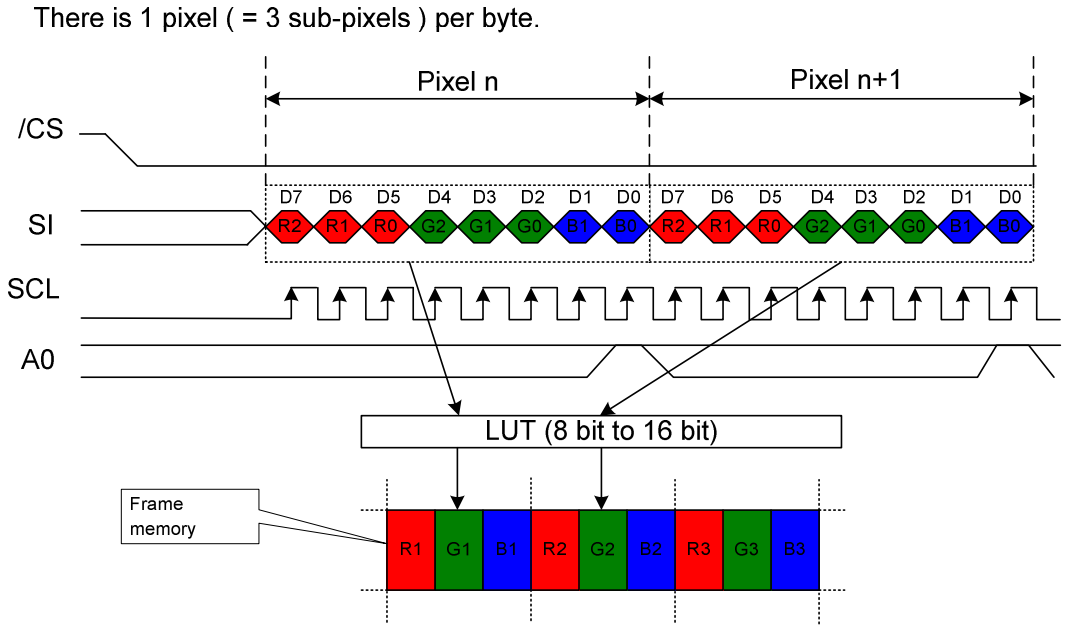

Note: R2, G2, B1 are the most significant bits and R0, G0, B0 are the least significant bits.

(2) R 4-bit, G 4-bit, B 4-bit, 4,096 colors — Type A

There are 2 pixel (= 3 sub-pixels) per 3 byte.

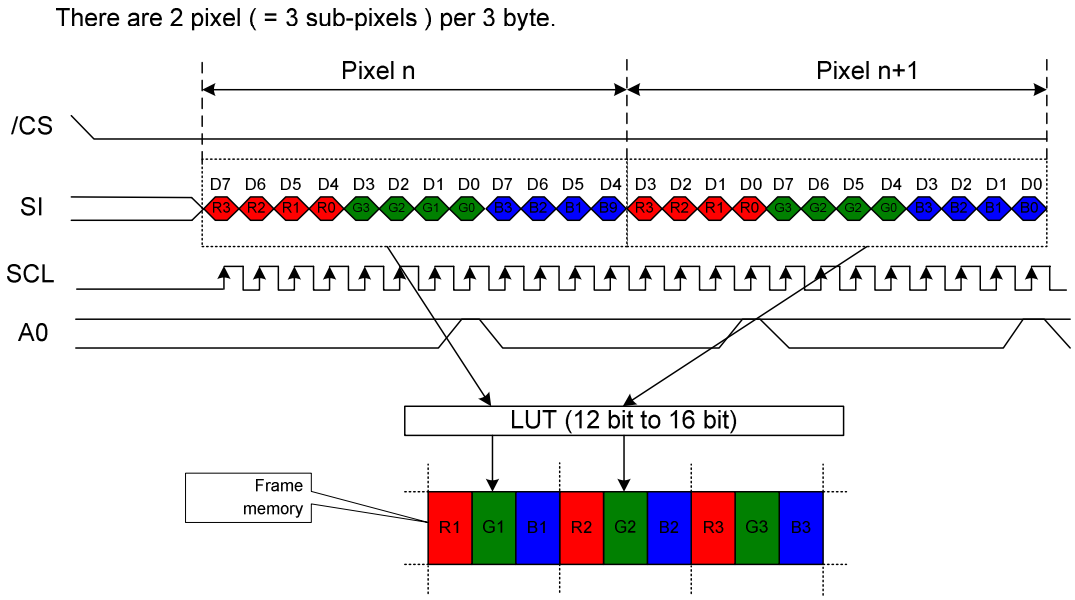

Note: R3, G3, B3 are the most significant bits and R0, G0, B0 are the least significant bits.

(3) R 4-bit, G 4-bit, B 4-bit, 4,096 colors — Type B

There is 1 pixel (= 3 sub-pixels) per 2 bytes.

There is 1 pixel (= 3 sub-pixels) per 2 bytes.

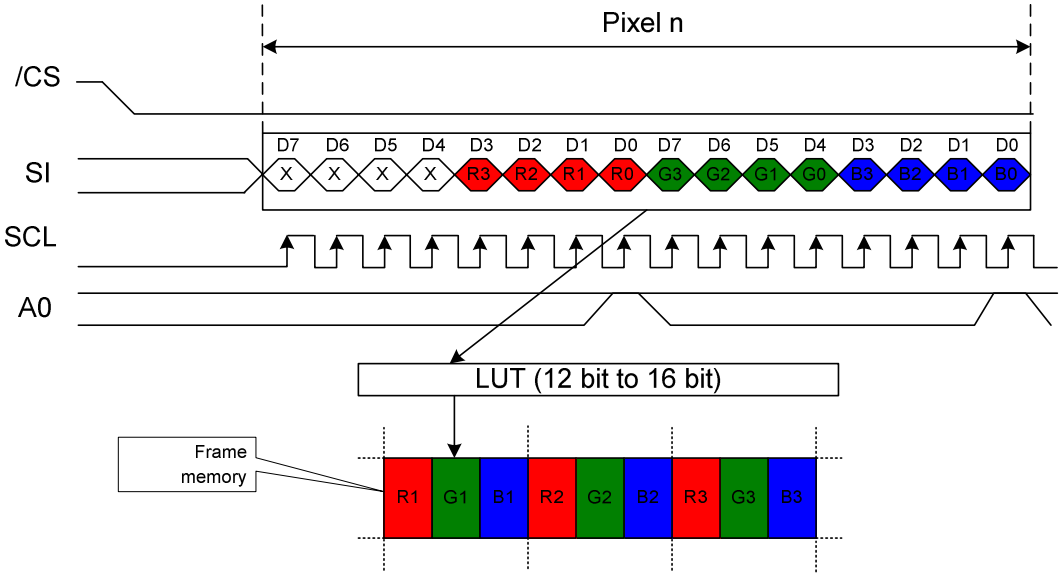

Note: R3, G3, B3 are the most significant bits and R0, G0, B0 are the least significant bits.

(4) R 5-bit, G 6-bit, B 5-bit, 65,536 colors

There is 1 pixel (= 3 sub-pixels) per 2 byte.

There is 1 pixel (= 3 sub-pixels) per 2 byte.

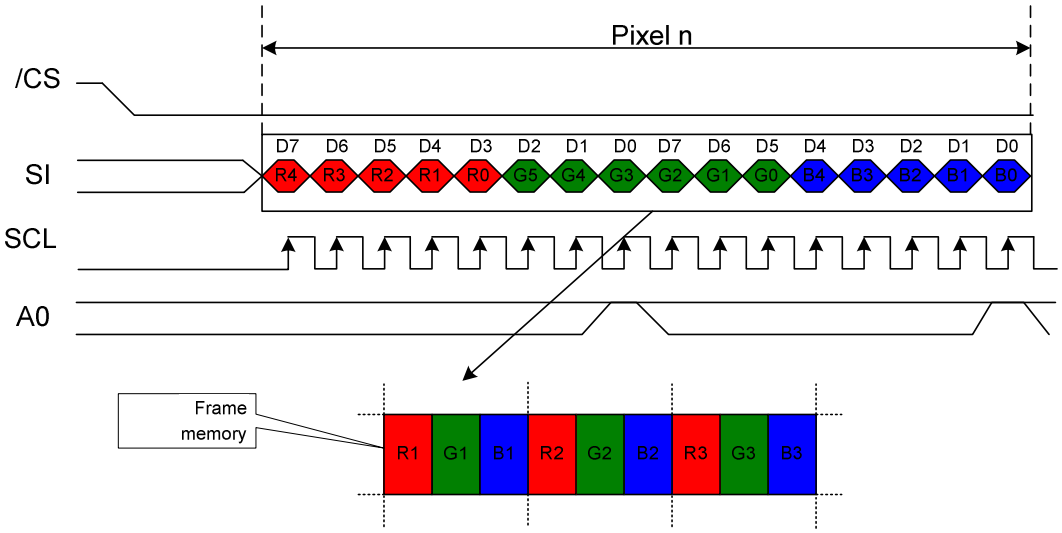

Note: R4, G5, B4 are the most significant bits and R0, G0, B0 are the least significant bits.

(5) R 5-bit, G 6-bit, B 5-bit, 262,144 colors

There is 1 pixel (= 3 sub-pixels) per 3 byte.

There is 1 pixel (= 3 sub-pixels) per 3 byte.

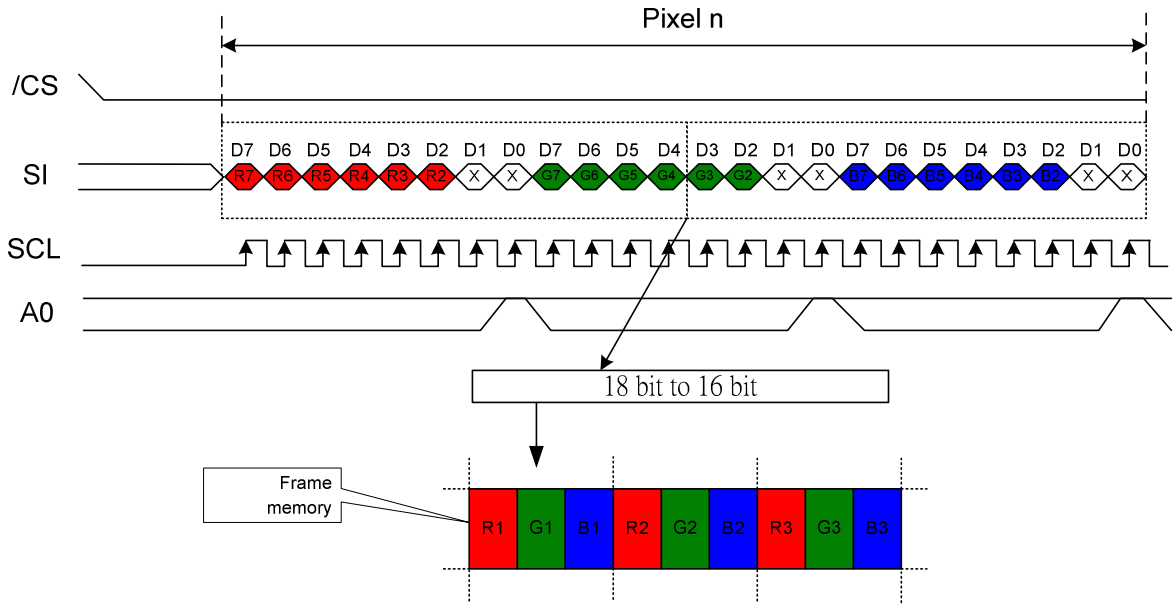

Note: R7, G7, B7 are the most significant bits and R2, G2, B2 are the least significant bits.

(6) R 8-bit, G 8-bit, B 8-bit, 16M colors

There is 1 pixel (= 3 sub-pixels) per 3 byte.

There is 1 pixel (= 3 sub-pixels) per 3 byte.

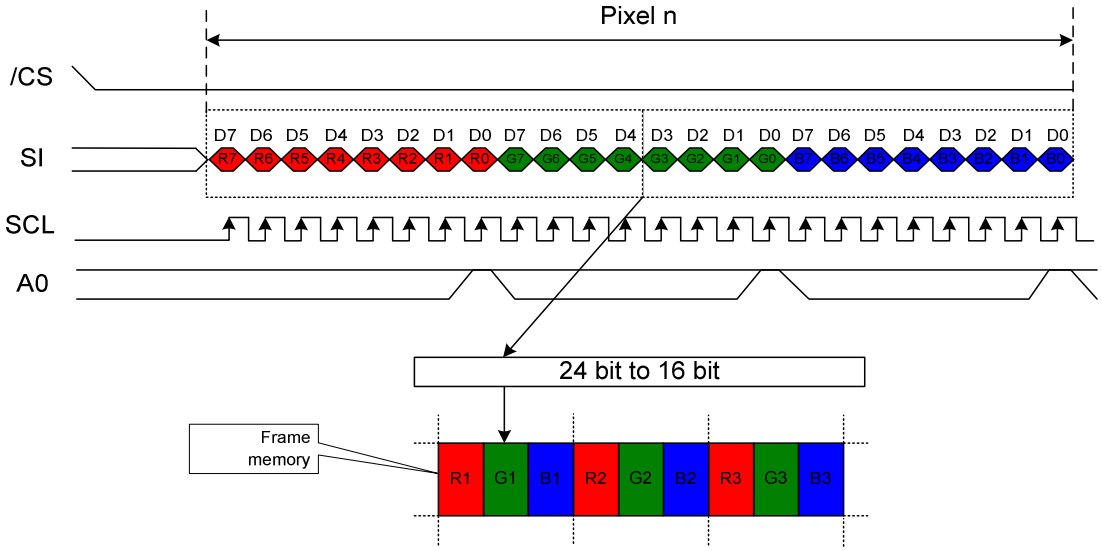

Note: R7, G7, B7 are the most significant bits and R0, G0, B0 are the least significant bits.

9-bit serial interface (3-line)

(1) R 3-bit, G 3-bit, B 2-bit, 256 colors

There is 1 pixel (= 3 sub-pixels) per byte.

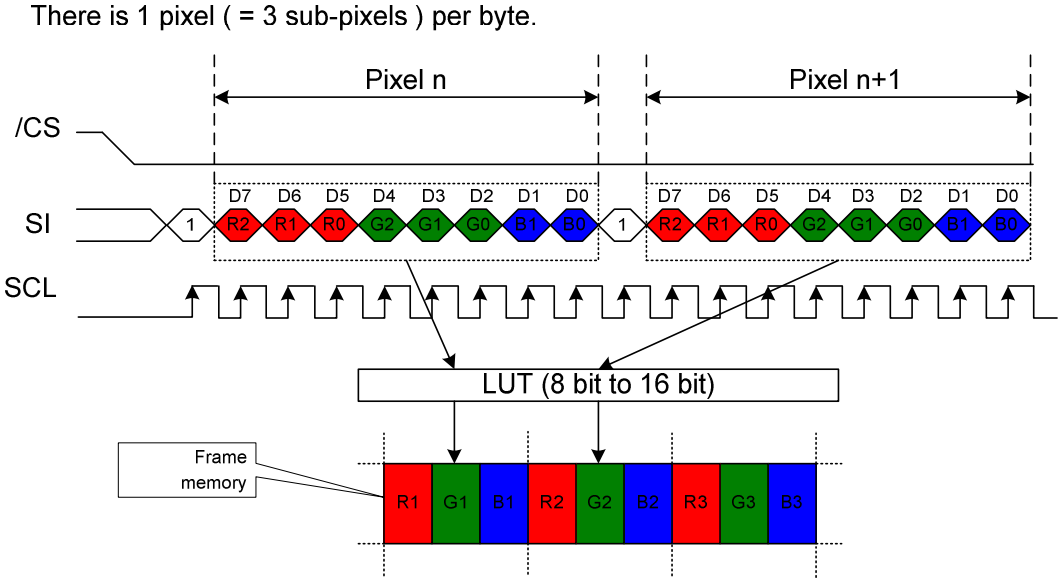

Note: R2, G2, B1 are the most significant bits and R0, G0, B0 are the least significant bits.

(2) R 4-bit, G 4-bit, B 4-bit, 4,096 colors – Type A

There are 2 pixel (= 3 sub-pixels) per 3 byte.

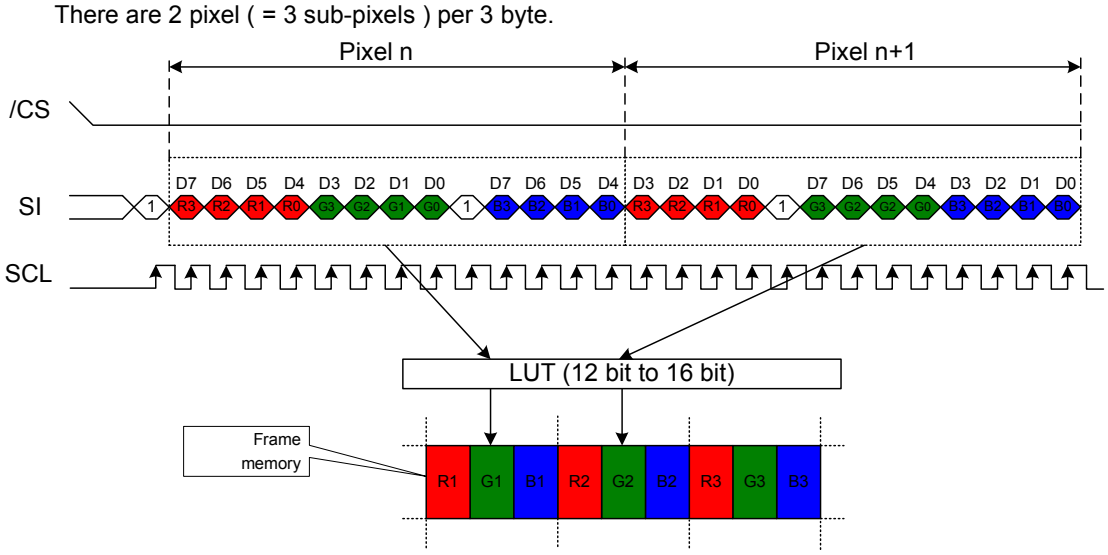

Note: R3, G3, B3 are the most significant bits and R0, G0, B0 are the least significant bits.

(3) R 4-bit, G 4-bit, B 4-bit, 4,096 colors – Type B

There is 1 pixel (= 3 sub-pixels) per 2 bytes.

There is 1 pixel (= 3 sub-pixels) per 2 bytes.

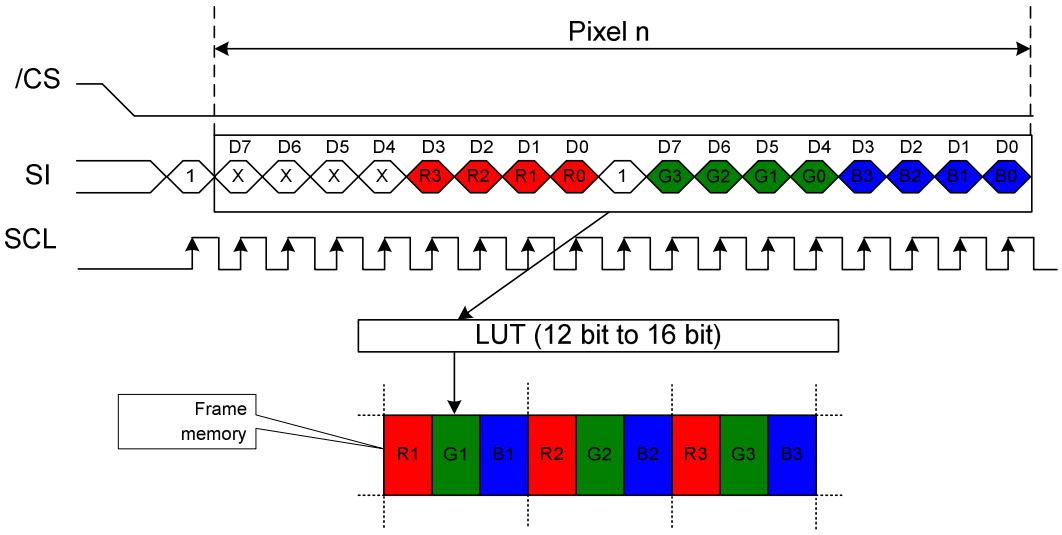

Note: R3, G3, B3 are the most significant bits and R0, G0, B0 are the least significant bits.

(4) R 5-bit, G 6-bit, B 5-bit, 65,536 colors

There is 1 pixel (= 3 sub-pixels) per 2 byte.

There is 1 pixel (= 3 sub-pixels) per 2 byte.

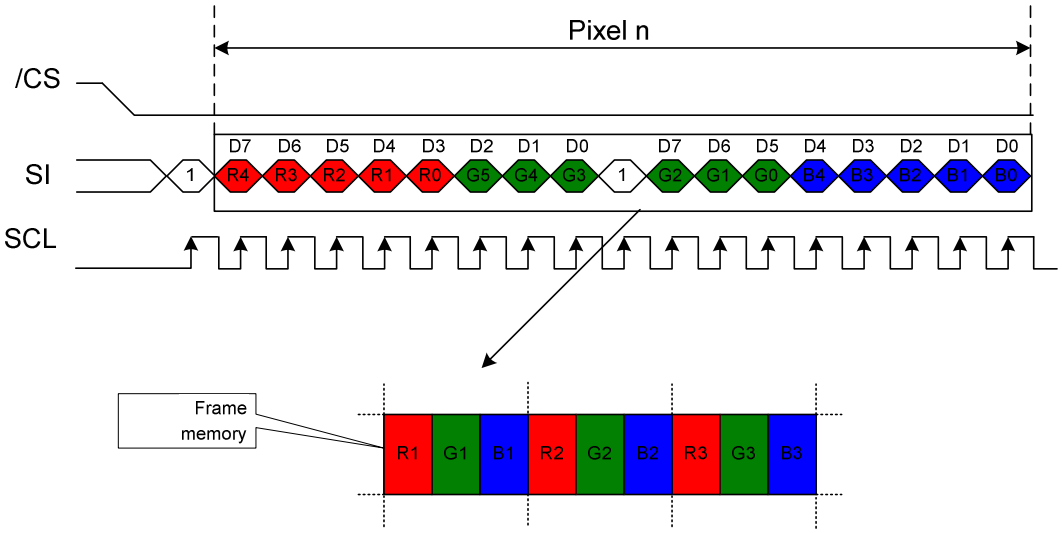

Note: R4, G5, B4 are the most significant bits and R0, G0, B0 are the least significant bits.

(5) R 5-bit, G 6-bit, B 5-bit, 262,144 colors

There is 1 pixel (= 3 sub-pixels) per 3 byte.

There is 1 pixel (= 3 sub-pixels) per 3 byte.

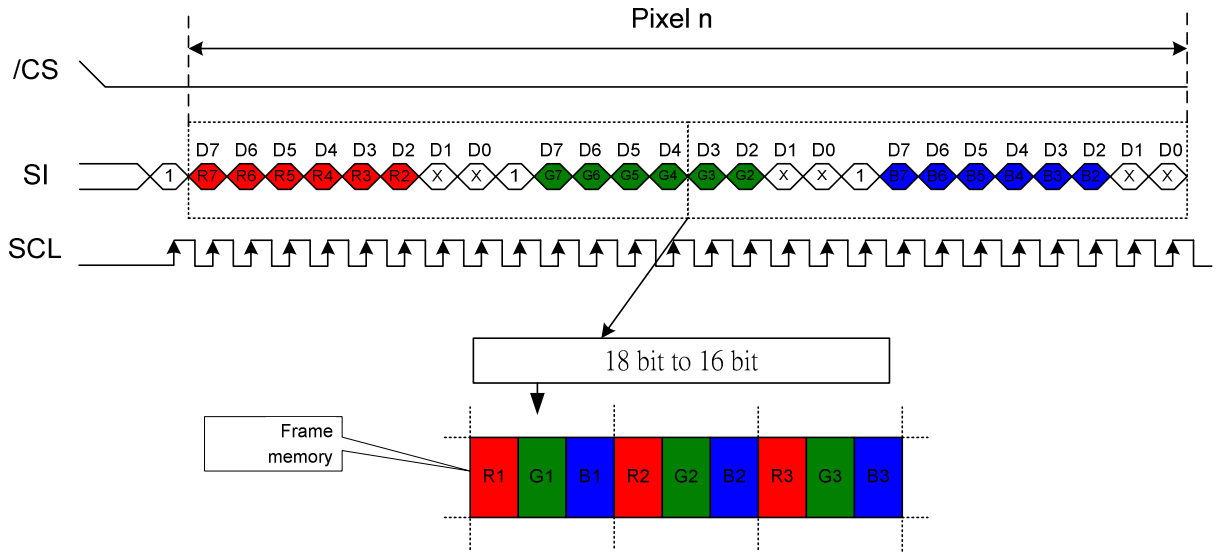

Note: R7, G7, B7 are the most significant bits and R2, G2, B2 are the least significant bits.

(6) R 8-bit, G 8-bit, B 8-bit, 16M colors

There is 1 pixel (= 3 sub-pixels) per 3 byte.

There is 1 pixel (= 3 sub-pixels) per 3 byte.

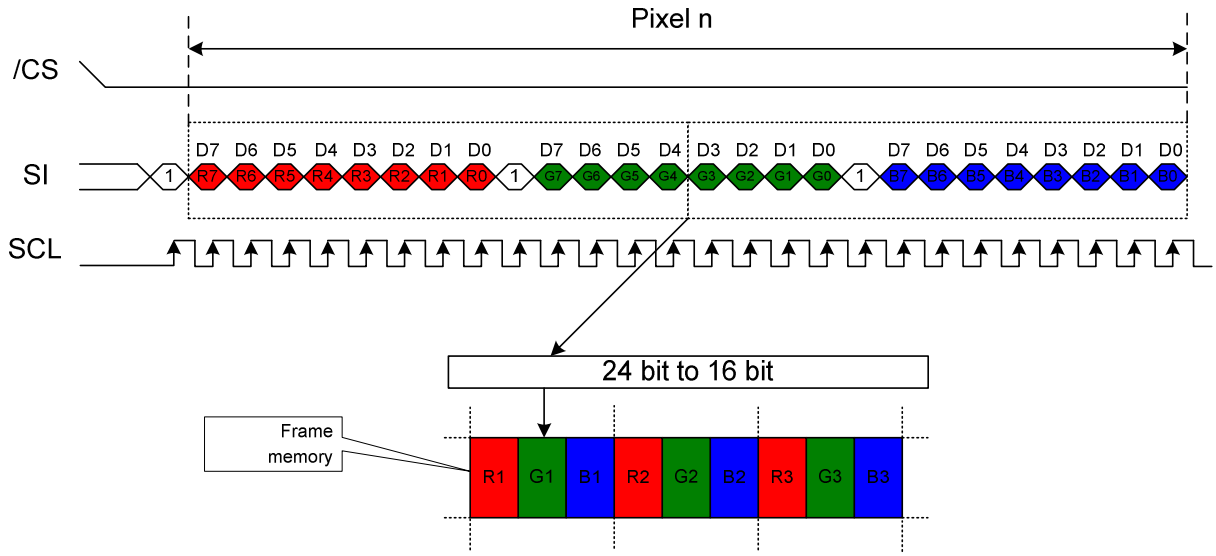

Note: R7, G7, B7 are the most significant bits and R0, G0, B0 are the least significant bits.

7.3 ACCESS TO DDRAM AND INTERNAL REGISTERS

ST7637 realizes high-speed data transfer because the access from MPU is a sort of pipeline processing done via the bus holder attached to the internal, requiring the cycle time alone without needing the wait time.

For example, when MPU writes data to the DDRAM, the data is once held by the bus holder and then written to the DDRAM before the succeeding write cycle is started. When MPU reads data from the DDRAM, the first read cycle is dummy and the bus holder holds the data read in the dummy cycle, and then it read from the bus holder to the system bus in the succeeding read cycle. Figure 7.3-1 illustrates these relations.

In 80-series interface mode:

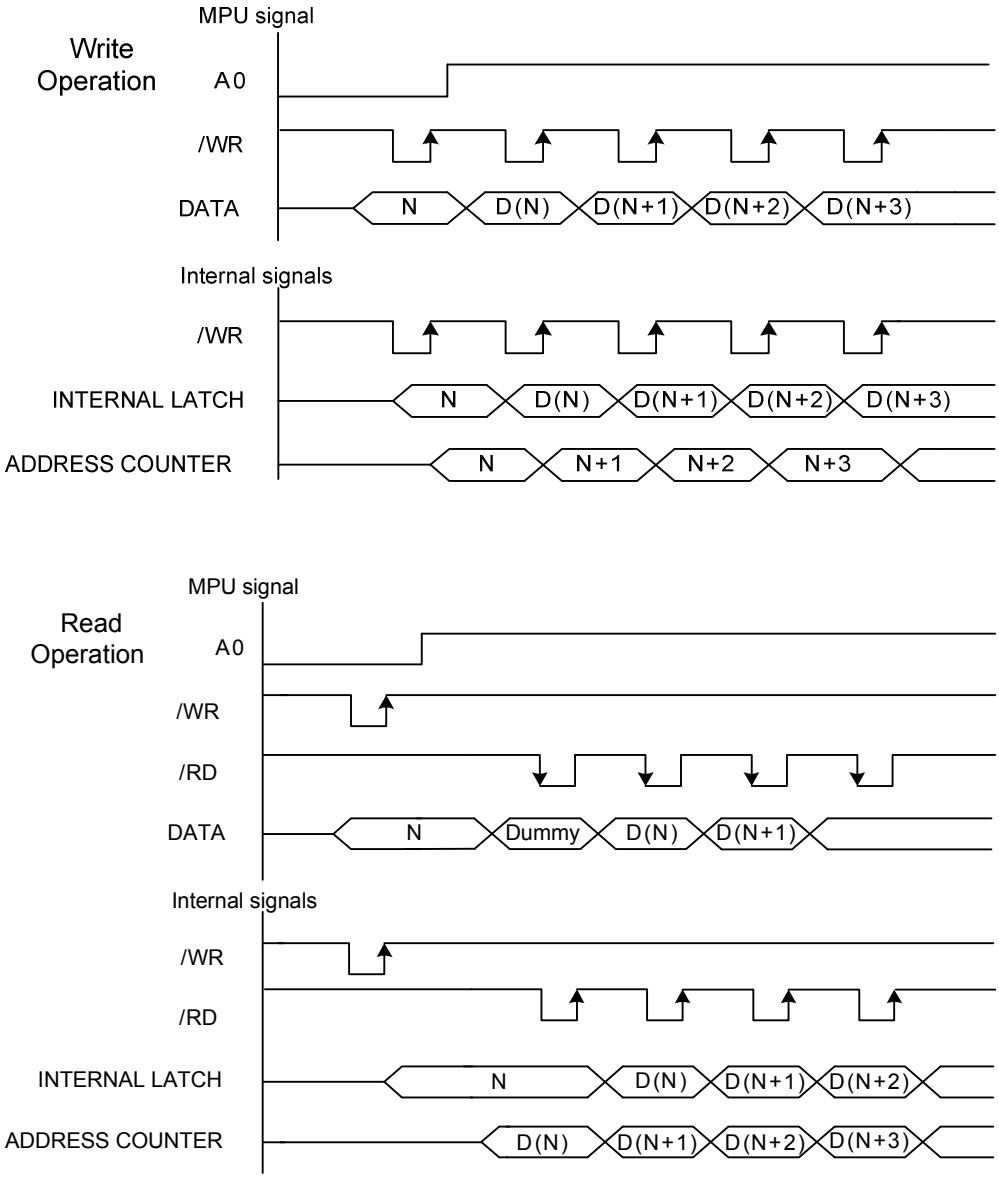

Figure 7.3-1

7.4 DISPLAY DATA RAM (DDRAM)

7.4.1. DDRAM

It is 132 X 132 X 16 bits capacity RAM prepared for storing dot data. Refer to the following memory map for the RAM configuration.

Memory Map

RGB alignment													
Data control command				Column									
	(MADCTR) MX=0			0			1				131		
	(MADCTR) MX=1			131			130				0		
	Color			R	G	B	R	G	B		R	G	B
	Page \ Data												
	(MADCTR) MY=0		(MADCTR) MY=1										
	0		131										
	1		130										
	2		129										
	3		128										
	4		127										
	5		126										
	6		125										
	7		124										
	:		:										
	124		7										
	125		6										
	126		5										
	127		4										
	128		3										
	129		2										
	130		1										
	131		0										
SEGout				0	1	2	3	4	5		393	394	395

You can change position of R and B with MADCTR command.

7.4.2. Address Control

The address counter sets the addresses of the display data RAM for writing.

Data is written pixel into the RAM matrix of ST7637. The data for one pixel or two pixels is collected (RGB 5-6-5-bit), according to the data formats. As soon as this pixel-data information is complete, the “Write access” is activated on the RAM. The locations of RAM are addressed by the address pointers. The address ranges are X=0 to X=131 (83h) and Y=0 to Y=131 (83h). Addresses outside these ranges are not allowed.

Before writing to the RAM, a window must be defined into which will be written. The window is programmable via the command registers XS, YS designating the start address and XE, YE designating the end address.

For example the whole display contents will be written, the window is defined by the following values: XS=0 (0h) YS=0 (0h) and XE=131 (83h), YE=131 (83h).

In vertical addressing mode (MV=1), the Y-address increments after each byte, after the last Y-address (Y=YE), Y wraps around to YS and X increments to address the next column. In horizontal addressing mode (MV=0), the X-address increments after each byte, after the last X-address (X=XE), X wraps around to XS and Y increments to address the next row. After the every last address (X=XE and Y=YE) the address pointers wrap around to address (X=XS and Y=YS). For flexibility in handling a wide variety of display architectures, the commands “CASET, RASET” and “MADCTR”, define flags MV, MX and MY, which allows mirroring of the X-address and Y-address. All combinations of flags are allowed. Figure 7.4-1show the available combinations of writing to the display RAM. When MX, MY and MV will be changed the data must be rewritten to the display RAM.

For each image condition, the controls for the column and row counters apply as below:

Condition	Column Counter	Row Counter
When RAMWR command is accepted	Return to “Start Column (XS)”	Return to “Start Row (YS)”
Complete Pixel Read / Write action	Increment by 1	No change
The Column counter value is larger than “End Column (XE)”	Return to “Start Column (XS)”	Increment by 1
The Column counter value is larger than “End Column (XE)” and the Row counter value is larger than “End Row (YE)”	Return to “Start Column (XS)”	Return to “Start Row (YS)”

Display Data Direction	MADCTR Parameter			Image in the Host (MPU)	Image in the Driver (DDRAM)
	MV	MX	MY		
Normal	0	0	0	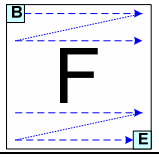	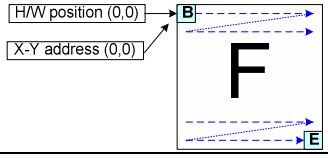
Y-Mirror	0	0	1	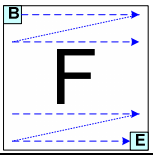	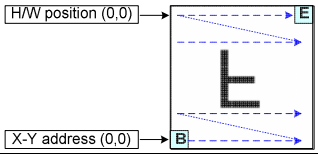
X-Mirror	0	1	0	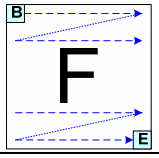	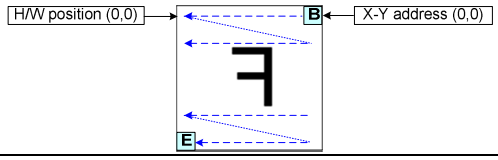
X-Mirror Y-Mirror	0	1	1	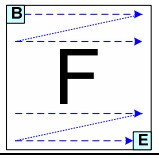	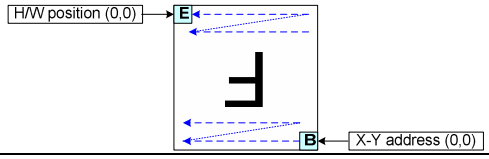
X-Y Exchange	1	0	0	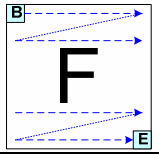	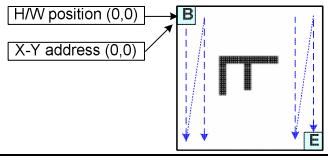
X-Y Exchange Y-Mirror	1	0	1	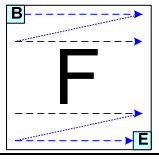	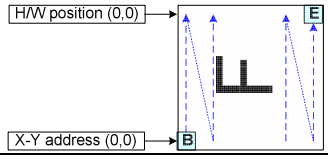
X-Y Exchange X-Mirror	1	1	0	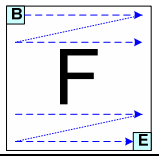	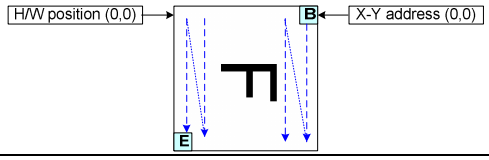
X-Y Exchange X-Mirror Y-Mirror	1	1	1	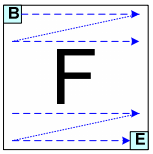	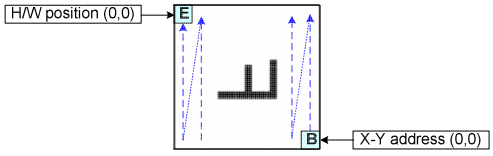

Figure 7.4-1 Frame Data Write Direction According to the MADCTR parameters (MV, MX and MY)

7.4.3. I/O Buffer Circuit

It is the bi-directional buffer used when MPU reads or writes the DDRAM. Since MPU's read or write of DDRAM is performed independently from data output to the display data latch circuit, asynchronous access to the DDRAM when the LCD is turned on does not cause troubles such as flicking of the display images.

7.4.4. Scroll Address Circuit

The circuit associates lines on DDRAM with COM output. ST7637 processes signals for the liquid crystal display on 1-line basis. Thus, when specifying a specific area in the area scroll display or partial display, you must designate it in line.

7.4.5. Display data Latch Circuit

This circuit is used to temporarily hold display data to be output from the DDRAM to the SEG decoder circuit. Since display normal/inverse and display on/off commands are used to control data in the latch circuit alone, they do not modify data in the DDRAM.

7.4.6. Normal Display On or Partial Mode On, Vertical Scroll Off

In this mode, contents of the frame memory within an area where column address is 00h to 83h and row address is 00h to 83h is displayed.

To display a dot on leftmost top corner, store the dot data at (column address, row address) = (0,0).

Example1) Normal Display On

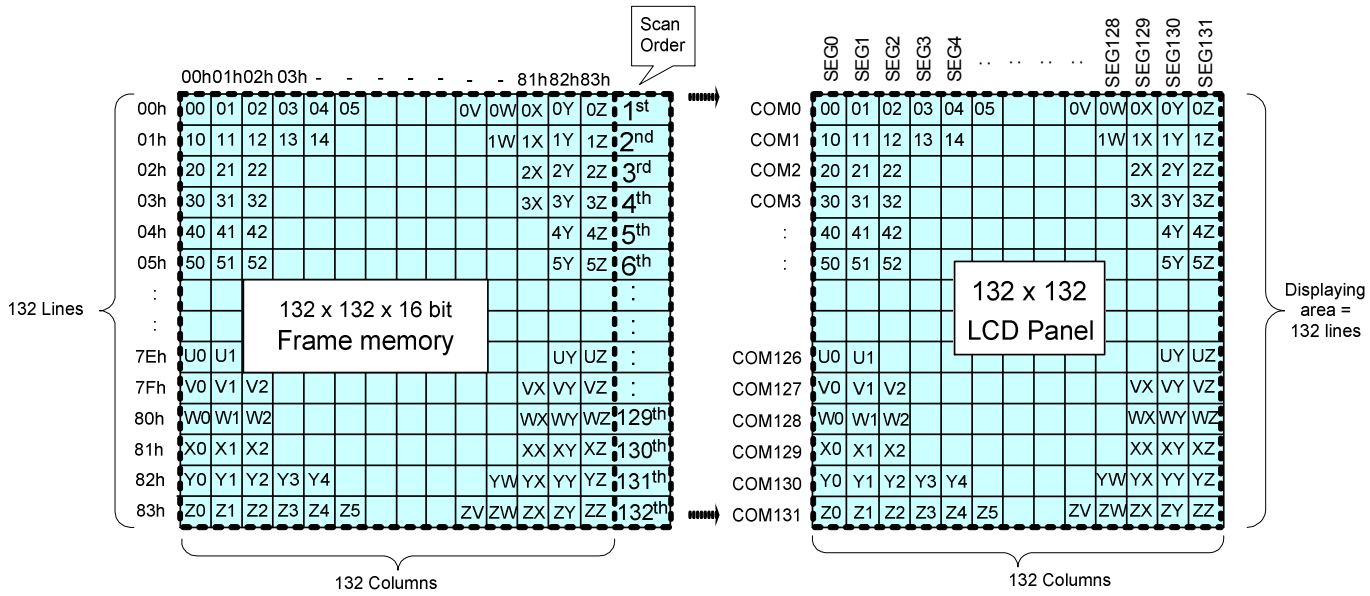

Example2) Partial Display On: PSL[6:0] = 04h, PEL[6:0] = 80h, MADCTR (ML)=0

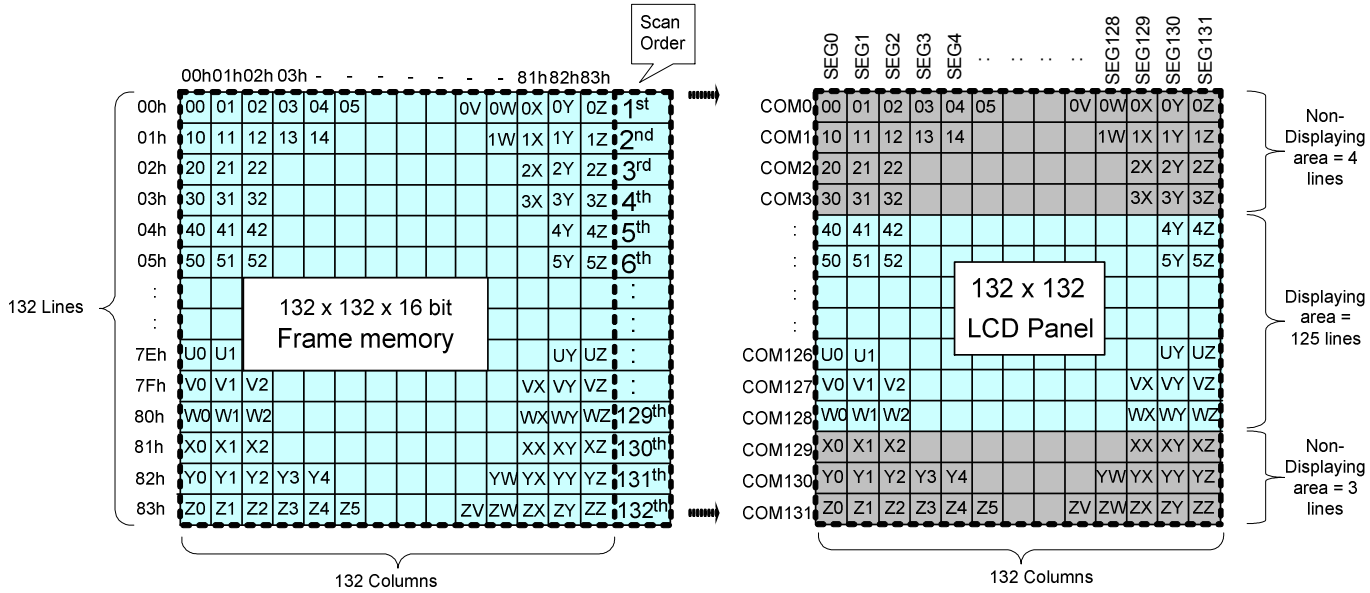

7.4.7. Vertical Scroll/Rolling Scroll

7.4.7.1. Rolling Scroll

There is just one types of vertical scrolling, which are determined by the commands “Vertical Scrolling Definition” (33h) and “Vertical Scrolling Start Address” (37h).

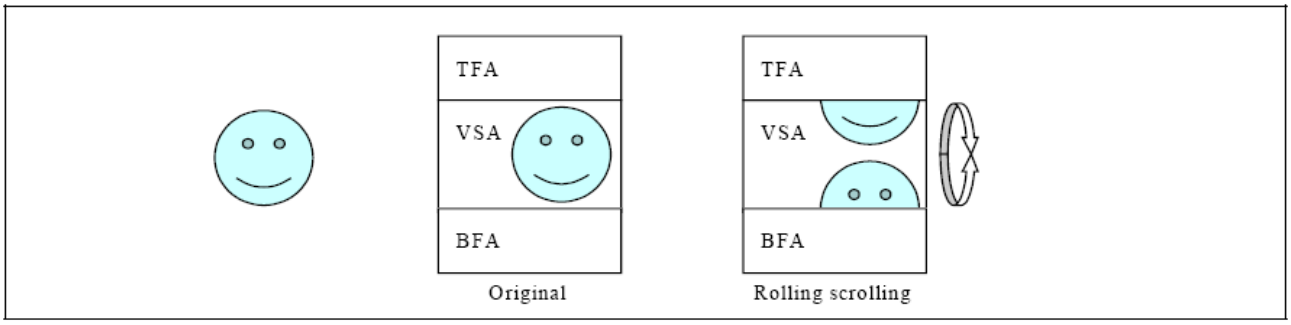

Figure 7.4-2 Rolling Scroll Definition

When Vertical Scrolling Definition Parameters (TFA+VSA+BFA) =132. In this case, ‘rolling’ scrolling is applied as shown below. All the memory contents will be used.

Example1) Panel size=132 x 132, TFA =3, VSA=127, BFA=2, SSA=4, MADCTR ML=0: Rolling Scroll

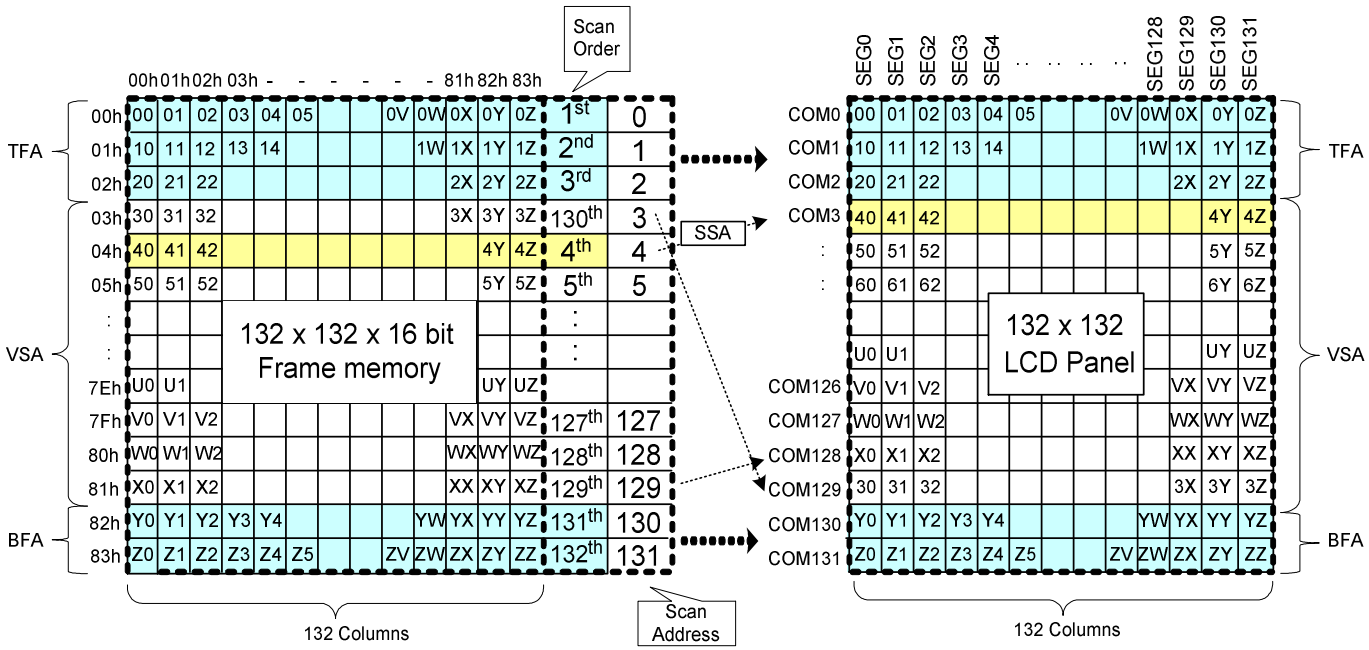

Example2) Panel size=132 x 132, TFA =3, VSA=127, BFA=2, SSA=4, MADCTR ML=1: Rolling Scroll (TFA and BFA are exchanged)

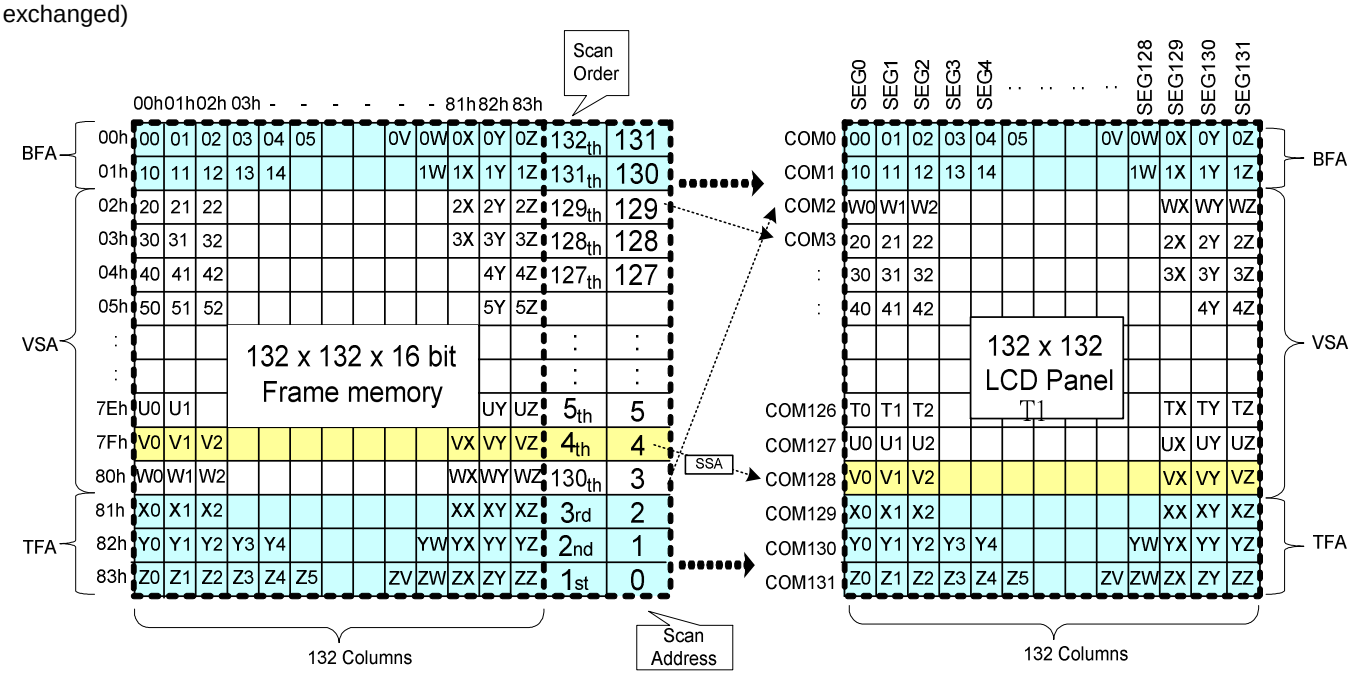

7.4.7.2. Vertical Scroll Example

There are 2 types of vertical scrolling, which are determined by the commands “Vertical Scrolling Definition” (33h) and “Vertical Scrolling Start Address” (37h).

Case 1: TFA + VSA + BFA<132

N/A. Do not set TFA + VSA + BFA<132. In that case, unexpected picture will be shown.

Case 2: TFA + VSA + BFA=132 (Rolling Scrolling)

Example1) When MADCTR parameter ML=”0”, TFA=0, VSA=132, BFA=0 and VSCSAD=40.

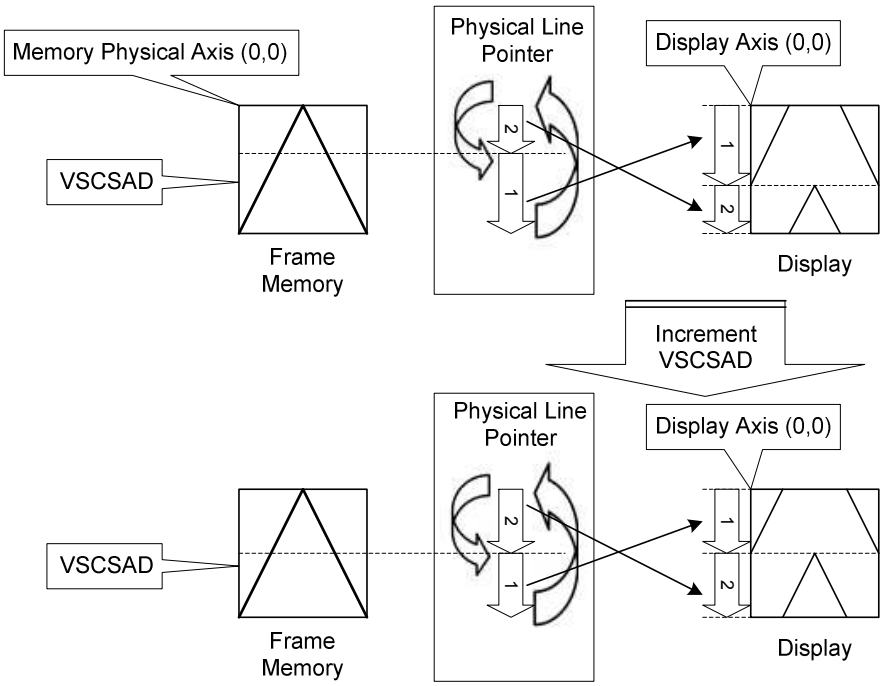

Example2) When MADCTR parameter ML="1", TFA=10, VSA=122, BFA=0 and VSCSAD=30.

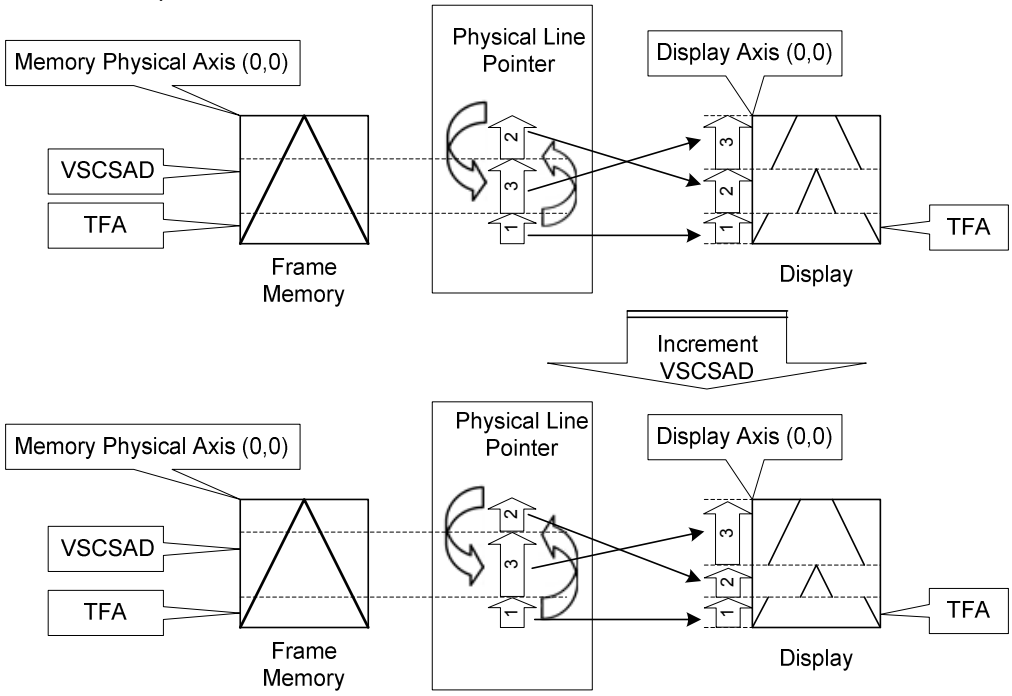

7.4.8. Tearing Effect Output Line

The Tearing Effect output line supplies to the MPU a Panel synchronization signal. This signal can be enabled or disabled by the Tearing Effect Line Off & On commands. The signal can be used by the MPU to synchronize Frame Memory Writing when displaying video images.

7.4.8.1. Tearing Effect Line Modes

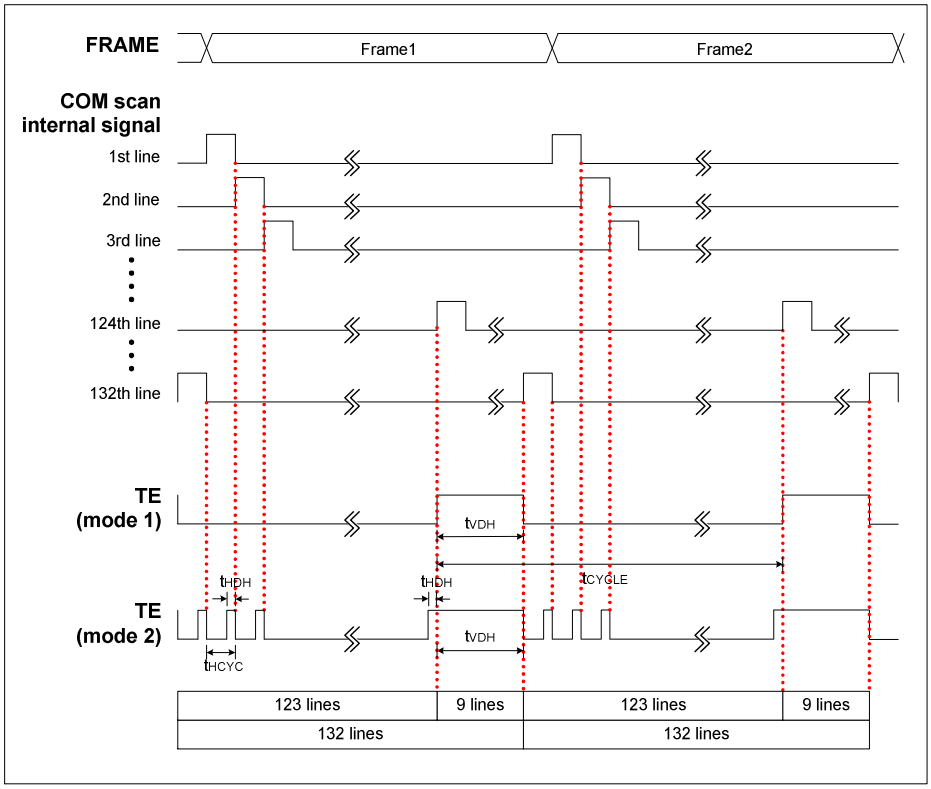

Mode 1, the Tearing Effect Output signal consists of V-Sync (tVHD) information. It starts at 124th line signal and ends at the 132th line signal. There is one high pulse during each frame.

Mode 2, the Tearing Effect Output signal consists of both H-Sync(tHDH) and V-Sync(tVDH) information. TE pin outputs tHDH pulse on each COM scan signal. During 124th ~ 132th line signal, it output a high pulse which equals:
1 tHDH + 1 tVDH.

Note: During Sleep In Mode, the Tearing Effect Output Pin is active Low.

7.4.8.2. Tearing Effect Line Timing

The Tearing Effect signal is described below:

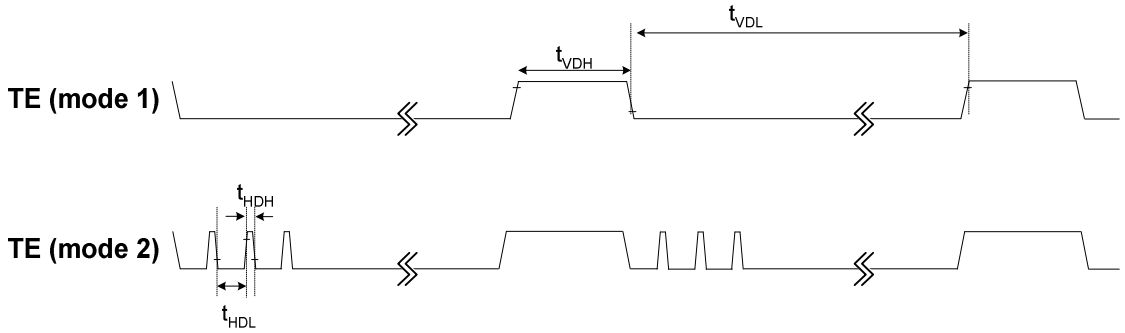

Figure 7.4-3 AC characteristics of Tearing Effect Signal

Idle Mode Off (Frame Rate = 77Hz)

Symbol	Parameter	Min	Typ	Max	Unit	Description
t_{VDL}	Vertical Timing Low Duration	--	11.4	--	ms	Mode1
t_{VDH}	Vertical Timing High Duration	1	1.6	--	ms	
t_{HDL}	Horizontal Timing Low Duration	-	92	--	us	Mode2
t_{HDH}	Horizontal Timing High Duration	3	6	--	us	

Note: The signal's rise and fall times (tf, tr) are stipulated to be equal to or less than 15ns.

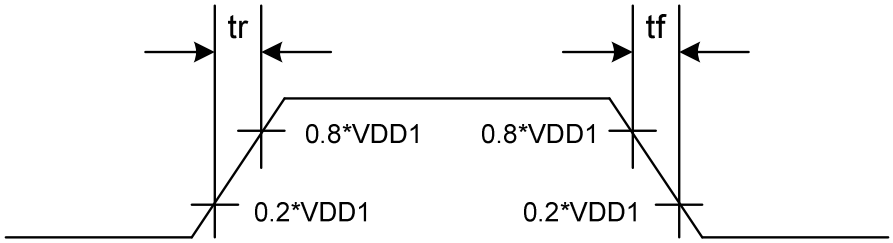

Example 1: MPU Write is faster than Panel Read.

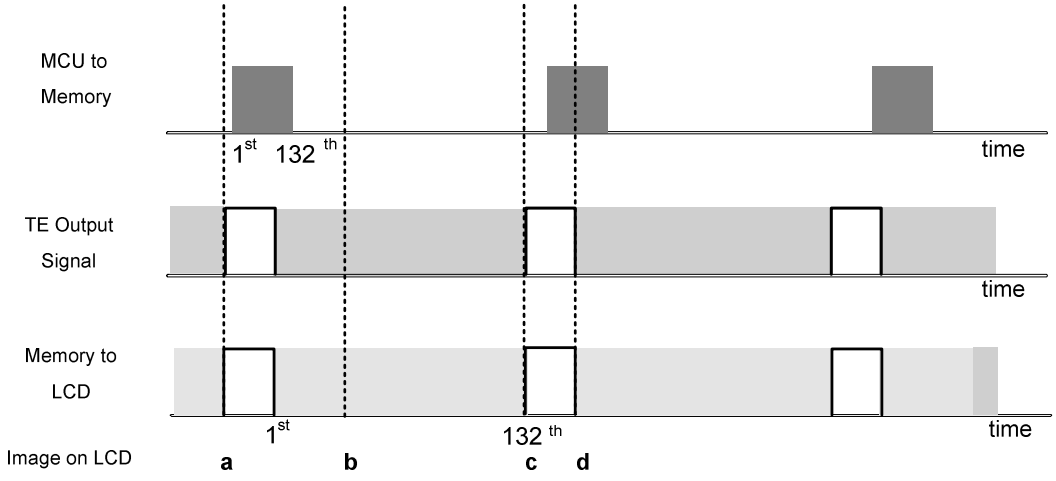

Data write to Frame Memory is now synchronized to the Panel Scan. It should be written during the vertical sync pulse of the Tearing Effect Output Line. This ensures that data is always written ahead of the panel scan and each Panel Frame refresh has a complete new image:

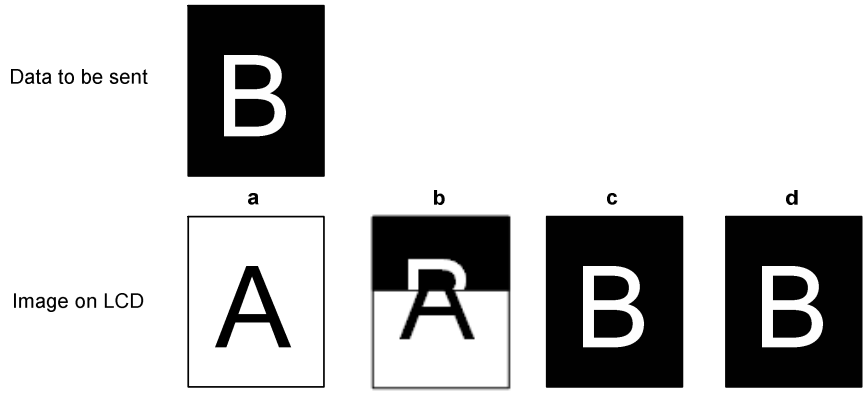

Example 2: MPU Write is slower than Panel Read.

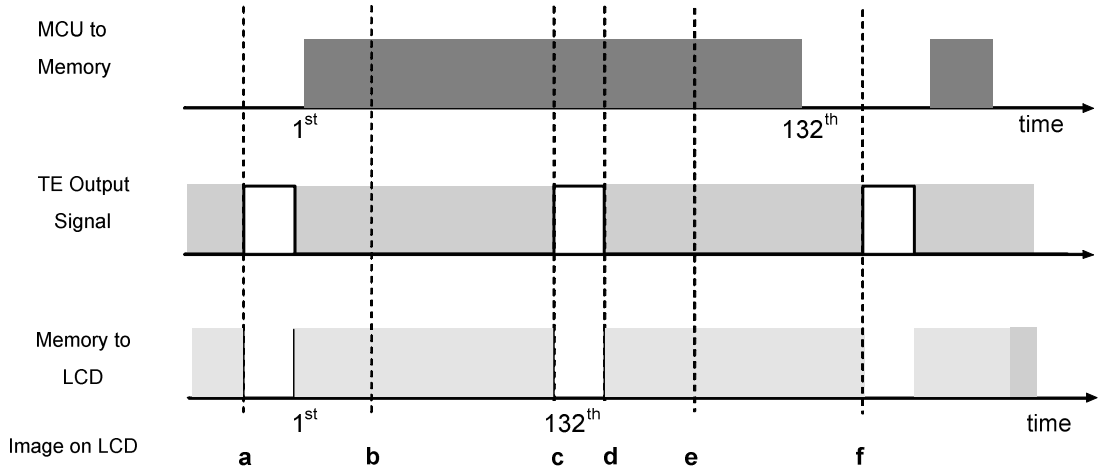

The MPU to Frame Memory write begins just after Panel Read has commenced i.e. after one horizontal sync pulse of the Tearing Effect Output Line. This allows time for the image to download behind the Panel Read pointer and finishing download during the subsequent Frame before the Read Pointer “catches” the MPU to Frame memory write position.

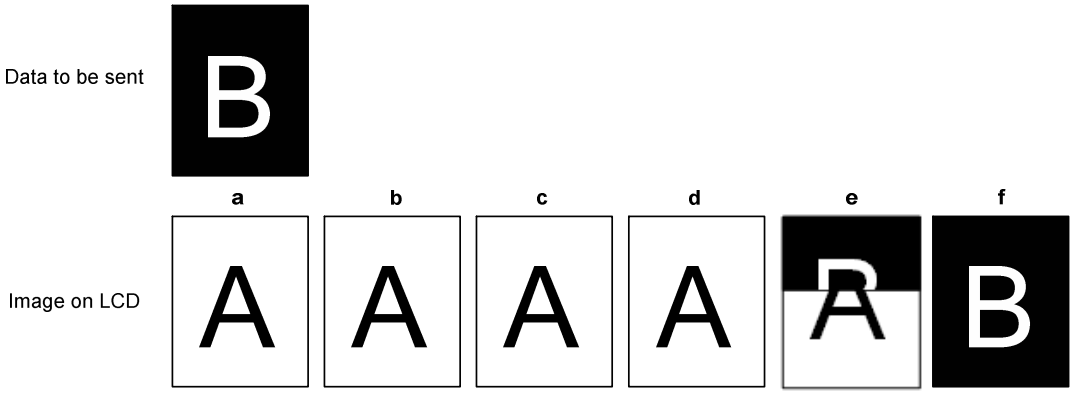

7.5 Gray-Scale Display

ST7637 incorporates a 4FRC & 31 PWM function circuit to display a 64 gray-scale display.

7.6 Oscillation circuit

ST7637 is built-in an oscillator circuit. It provides internal clock without external resistor. This oscillator signal is used in the voltage converter and display timing generation circuit.

7.7 Display Timing Generator Circuit

This circuit generates some signals to be used for displaying LCD. The display clock , which is generated by oscillation clock, generates the clock for the line counter and the signal for the display data latch. The line address of on-chip RAM is generated in synchronization with the display clock and the display data latch circuit latches the 132-bits display data in synchronization with the display clock. The display data, which is read to the LCD driver, is completely independent of the access to the display data RAM from the microprocessor. The display clock generates an LCD AC signal (M), which enables the LCD driver to make an AC drive waveform, and also generates an internal common timing signal and start signal to the common driver. The frame signal or the line signal changes the M by setting internal instruction. Driving waveform and internal timing signal are shown in Figure 7.7-1.

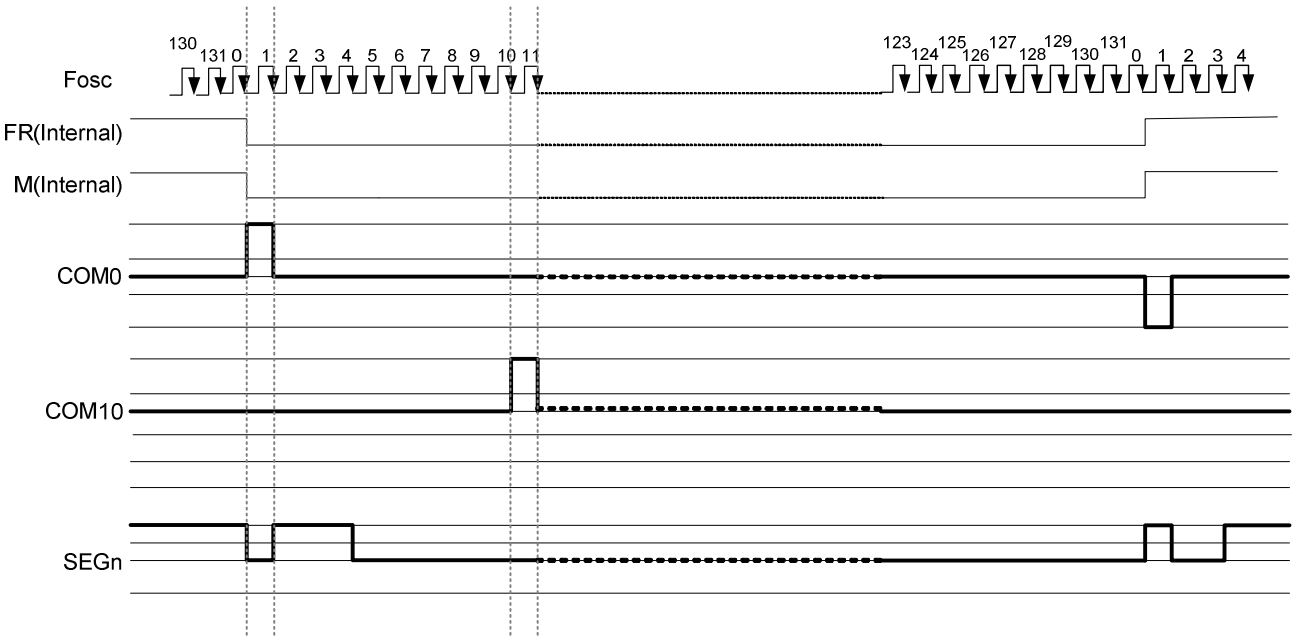

Figure 7.7-1 2-frame AC Driving Waveform (Duty Ratio: 1/132)

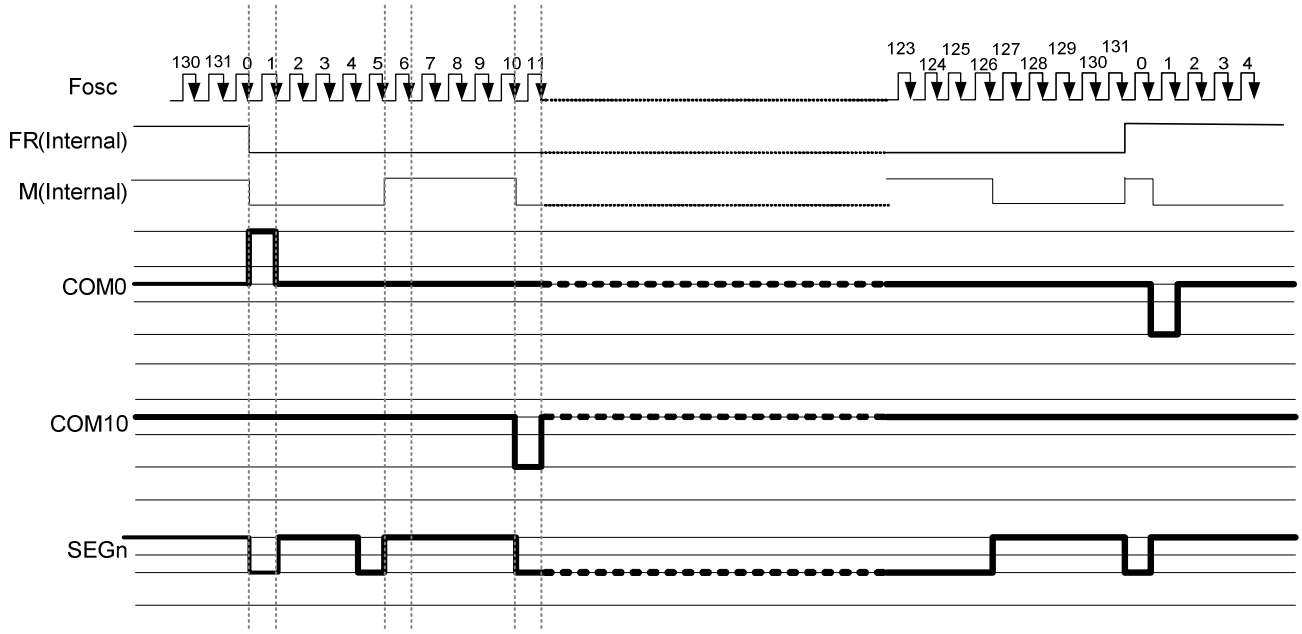

Figure 7.7-2 N-Line Inversion Driving Waveform (N=10, Duty Ratio=1/132)

7.8 POWER LEVEL DEFINITION

7.8.1. Power ON/OFF SEQUENCE

NOTE: VDDI=VDD, VDD1; VDDA=VDD2, VDD3, VDD4, VDD5

During power off, if LCD is in the Sleep Out mode, VDDA and VDDI must be powered down minimum 120msec after /RST has been released.

During power off, if LCD is in the Sleep In mode, VDDI or VDDA can be powered down minimum 0msec after /RST has been released.

/CS can be applied at any timing or can be permanently grounded. /RST has priority over /CS.

If /RST line is not held stable by host during Power On Sequence as defined in Sections case1 and case2, then it will be necessary to apply a Hardware Reset (/RST) after Host Power On Sequence is complete to ensure correct operation. Otherwise function is not guaranteed.

The power on/off sequence is illustrated below:

Case 1 – /RST line is held High or Unstable by Host at Power On

If /RST line is held High or unstable by the host during Power On, then a Hardware Reset must be applied after both VDDA and VDDI have been applied – otherwise correct functionality is not guaranteed. There is no timing restriction upon this hardware reset.

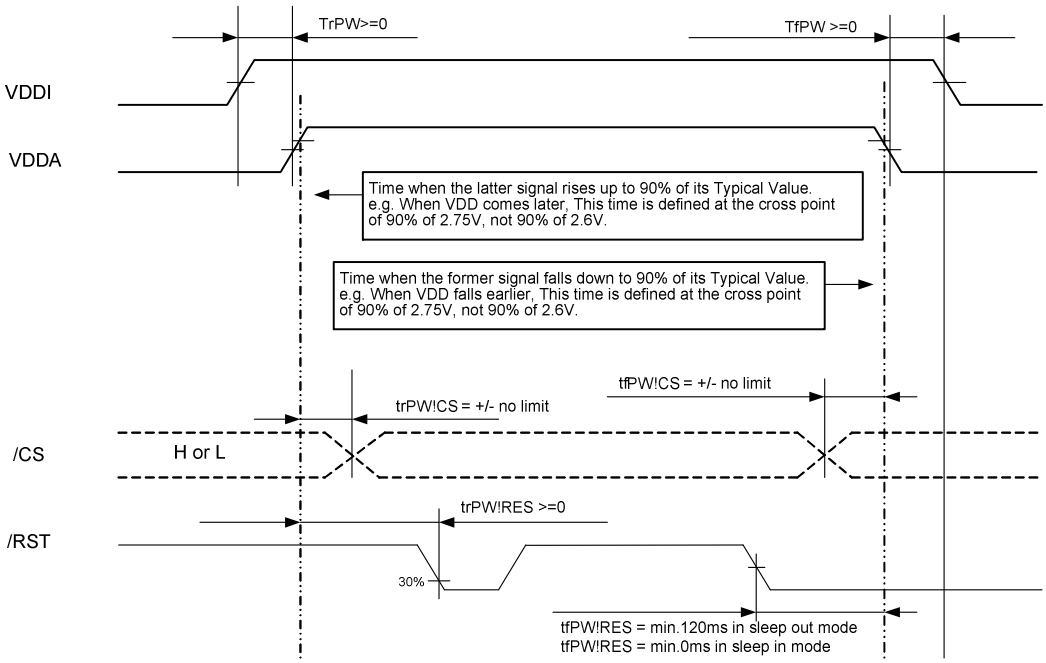

Note: Unless otherwise specified, timings herein show cross point at 50% of signal/power level.

Case 2 – /RST line is held Low by host at Power On

If /RST line is held Low (and stable) by the host during Power On, then the /RST must be held low for minimum 10µsec after both VDDA and VDDI have been applied.

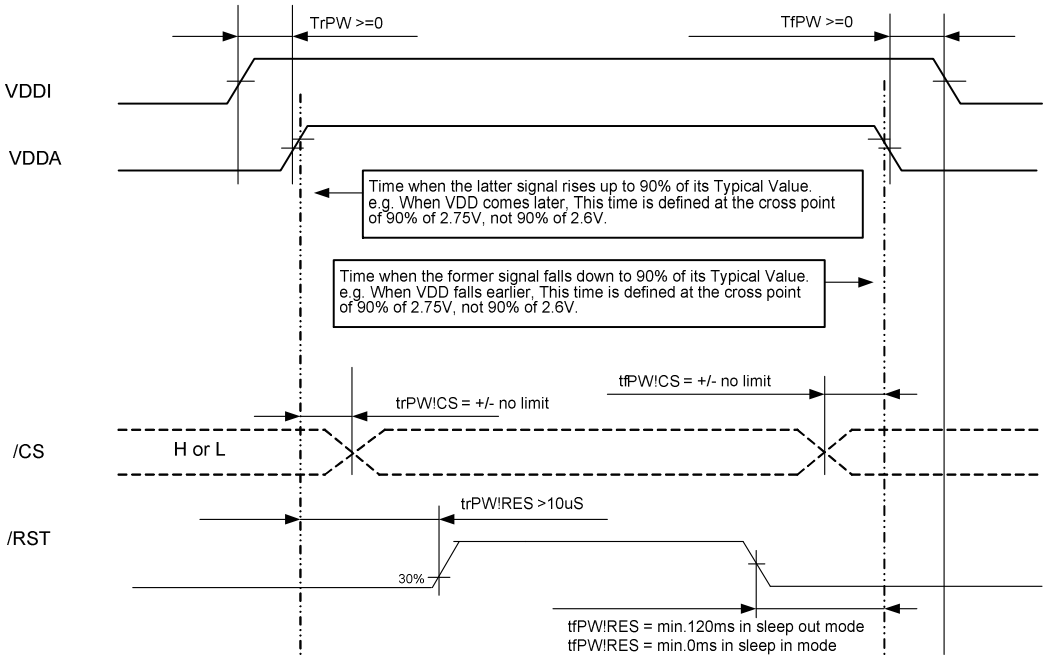

Note: Unless otherwise specified, timings herein show cross point at 50% of signal/power level.

7.8.2. Power Levels

6 level modes are defined they are in order of Maximum Power consumption to Minimum Power Consumption:

1. Normal Mode On (full display), Idle Mode Off, Sleep Out:

In this mode, the display is able to show maximum 65K colors.

2. Partial Mode On, Idle Mode Off, Sleep Out:

In this mode part of the display is used with maximum 65K colors.

3. Normal Mode On (full display), Idle Mode On, Sleep Out:

In this mode, the full display area is used but with 8 colors.

4. Partial Mode On, Idle Mode On, Sleep Out:

In this mode, part of the display is used but with 8 colors.

5. Sleep In Mode:

In this mode, the DC:DC converter, internal oscillator and panel driver circuit are stopped. Only the MCU interface and memory works with Digital VDD power supply. Contents of the memory are safe.

6. Power Off Mode:

In this mode, both Analog VDD and Digital VDDI are removed.

Note: Transition between modes 1-5 is controllable by MCU commands. Mode 6 is entered only when both Power supplies are removed.

POWER FLOW CHART FOR DIFFERENT POWER MODES

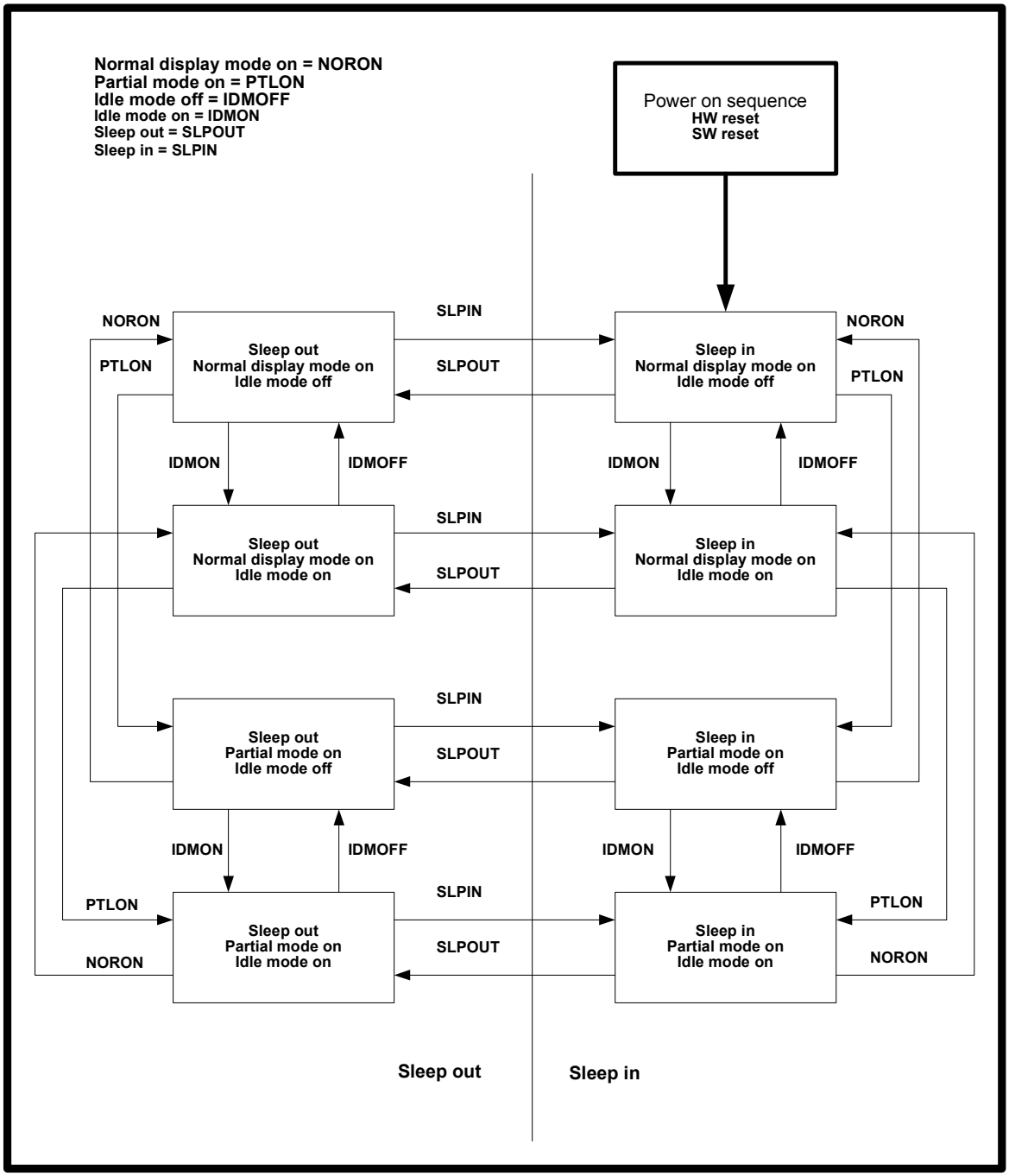

Note

1: There is not any abnormal visual effect when there is changing from one power mode to another power mode.

7.9 Color Depth Conversion Look Up Table

Color	Look Up Table Input		Look Up Table Outputs (16-bit/pixel) Frame Memory Data (5 or 6-bit)						Default Value	RGBSET Parameter
	256 Color Data 8-bit/pixel	4K Color Data 12-bit/pixel								
Red	000	0000		$R00_4$	$R00_3$	$R00_2$	$R00_1$	$R00_0$	00000	1
	001	0001		$R01_4$	$R01_3$	$R01_2$	$R01_1$	$R01_0$	00010	2
	010	0010		$R02_4$	$R02_3$	$R02_2$	$R02_1$	$R02_0$	00100	3
	011	0011		$R03_4$	$R03_3$	$R03_2$	$R03_1$	$R03_0$	00110	4
	100	0100		$R04_4$	$R04_3$	$R04_2$	$R04_1$	$R04_0$	01000	5
	101	0101		$R05_4$	$R05_3$	$R05_2$	$R05_1$	$R05_0$	01010	6
	110	0110		$R06_4$	$R06_3$	$R06_2$	$R06_1$	$R06_0$	01100	7
	111	0111		$R07_4$	$R07_3$	$R07_2$	$R07_1$	$R07_0$	01110	8
	Dummy input	1000		$R08_4$	$R08_3$	$R08_2$	$R08_1$	$R08_0$	10000	9
		1001		$R09_4$	$R09_3$	$R09_2$	$R09_1$	$R09_0$	10010	10
		1010		$R10_4$	$R10_3$	$R10_2$	$R10_1$	$R10_0$	10100	11
		1011		$R11_4$	$R11_3$	$R11_2$	$R11_1$	$R11_0$	10110	12
		1100		$R12_4$	$R12_3$	$R12_2$	$R12_1$	$R12_0$	11000	13
		1101		$R13_4$	$R13_3$	$R13_2$	$R13_1$	$R13_0$	11010	14
		1110		$R14_4$	$R14_3$	$R14_2$	$R14_1$	$R14_0$	11100	15
		1111		$R15_4$	$R15_3$	$R15_2$	$R15_1$	$R15_0$	11111	16
Green	000	0000	$G00_5$	$G00_4$	$G00_3$	$G00_2$	$G00_1$	$G00_0$	000000	17
	001	0001	$G01_5$	$G01_4$	$G01_3$	$G01_2$	$G01_1$	$G01_0$	000100	18
	010	0010	$G02_5$	$G02_4$	$G02_3$	$G02_2$	$G02_1$	$G02_0$	001000	19
	011	0011	$G03_5$	$G03_4$	$G03_3$	$G03_2$	$G03_1$	$G03_0$	001100	20
	100	0100	$G04_5$	$G04_4$	$G04_3$	$G04_2$	$G04_1$	$G04_0$	010000	21
	101	0101	$G05_5$	$G05_4$	$G05_3$	$G05_2$	$G05_1$	$G05_0$	010100	22
	110	0110	$G06_5$	$G06_4$	$G06_3$	$G06_2$	$G06_1$	$G06_0$	011000	23
	111	0111	$G07_5$	$G07_4$	$G07_3$	$G07_2$	$G07_1$	$G07_0$	011100	24
	Dummy input	1000	$G08_5$	$G08_4$	$G08_3$	$G08_2$	$G08_1$	$G08_0$	100000	25
		1001	$G09_5$	$G09_4$	$G09_3$	$G09_2$	$G09_1$	$G09_0$	100100	26
		1010	$G10_5$	$G10_4$	$G10_3$	$G10_2$	$G10_1$	$G10_0$	101000	27
		1011	$G11_5$	$G11_4$	$G11_3$	$G11_2$	$G11_1$	$G11_0$	101100	28
		1100	$G12_5$	$G12_4$	$G12_3$	$G12_2$	$G12_1$	$G12_0$	110000	29
		1101	$G13_5$	$G13_4$	$G13_3$	$G13_2$	$G13_1$	$G13_0$	110100	30
		1110	$G14_5$	$G14_4$	$G14_3$	$G14_2$	$G14_1$	$G14_0$	111000	31
		1111	$G15_5$	$G15_4$	$G15_3$	$G15_2$	$G15_1$	$G15_0$	111111	32
Blue	00	0000		$B00_4$	$B00_3$	$B00_2$	$B00_1$	$B00_0$	00000	33
	01	0001		$B01_4$	$B01_3$	$B01_2$	$B01_1$	$B01_0$	00010	34
	10	0010		$B02_4$	$B02_3$	$B02_2$	$B02_1$	$B02_0$	00100	35
	11	0011		$B03_4$	$B03_3$	$B03_2$	$B03_1$	$B03_0$	00110	36
	Dummy input	0100		$B04_4$	$B04_3$	$B04_2$	$B04_1$	$B04_0$	01000	37
		0101		$B05_4$	$B05_3$	$B05_2$	$B05_1$	$B05_0$	01010	38
		0110		$B06_4$	$B06_3$	$B06_2$	$B06_1$	$B06_0$	01100	39
		0111		$B07_4$	$B07_3$	$B07_2$	$B07_1$	$B07_0$	01110	40
		1000		$B08_4$	$B08_3$	$B08_2$	$B08_1$	$B08_0$	10000	41
		1001		$B09_4$	$B09_3$	$B09_2$	$B09_1$	$B09_0$	10010	42
		1010		$B10_4$	$B10_3$	$B10_2$	$B10_1$	$B10_0$	10100	43
		1011		$B11_4$	$B11_3$	$B11_2$	$B11_1$	$B11_0$	10110	44
		1100		$B12_4$	$B12_3$	$B12_2$	$B12_1$	$B12_0$	11000	45
		1101		$B13_4$	$B13_3$	$B13_2$	$B13_1$	$B13_0$	11010	46
		1110		$B14_4$	$B14_3$	$B14_2$	$B14_1$	$B14_0$	11100	47
		1111		$B15_4$	$B15_3$	$B15_2$	$B15_1$	$B15_0$	11111	48

7.10 Liquid Crystal Driver Power Circuit

The Power Supply circuits generate the voltage levels necessary to drive liquid crystal driver circuits with low power consumption and the fewest components. There are voltage converter circuits, voltage regulator circuits, and voltage follower circuits. They are controlled by power control instruction. For details, refers to "Instruction Description". Figure 7.10-1 shows the referenced combinations in using Power Supply circuits.

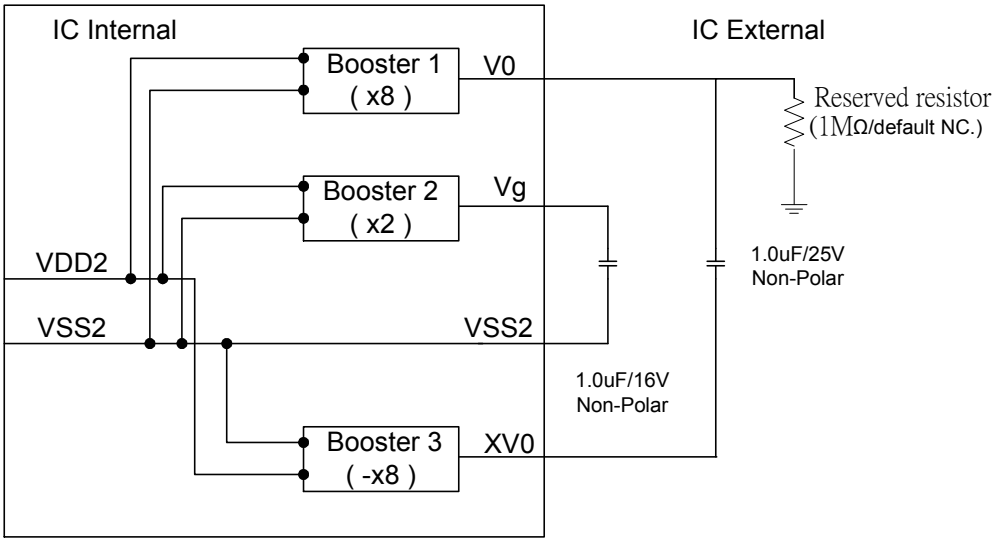

Figure 7.10-1 DC/DC Booster Block Diagram

7.10.1. Voltage Regulator Circuits

There is a built-in voltage regulator circuits in ST7637 for generating V0. After internal voltage is regulated by voltage regulator circuit, V0 is generated. Detail explanation of V0 set is listed below:

7.10.1.1. SET V0 (Temperatue = 24℃)

V0=a+{Vop[8:0]+Vop-offset[8:0]+(EV[6:0]-3Fh)}xb (V)

Example:

Vop[8:0]=011010010

Vop[8:0]=000000000

EV[6:0]=0111111

V0=3.6 + { 210 + 0 + (63-63) } x 0.04 =12 (V)

- a is a fixed constant value (see Table 7.10-2).
- b is a fixed constant value (see Table 7.10-2).
- Vop [8:0] is the programmed VOP value. The programming range for Vop[8:0] is 0 to 410 (19Ahex).
- The range of contrast is 128 steps for fine tuning VOP.

SYMBOL	VALUE	UNIT
a	3.6	V
b	0.04	V

Table 7.10-2

The Vop [8:0] value must be in the V0 programming range as given in Figure 7.10-3. Evaluating V0 equation, values outside the programming range indicated in many result. V0 range equals from 3.6V to 18V (V0=3.6+{vop[8:0]+vop-offset[8:0]+(EV[6:0]-3Fh)}x0.04).

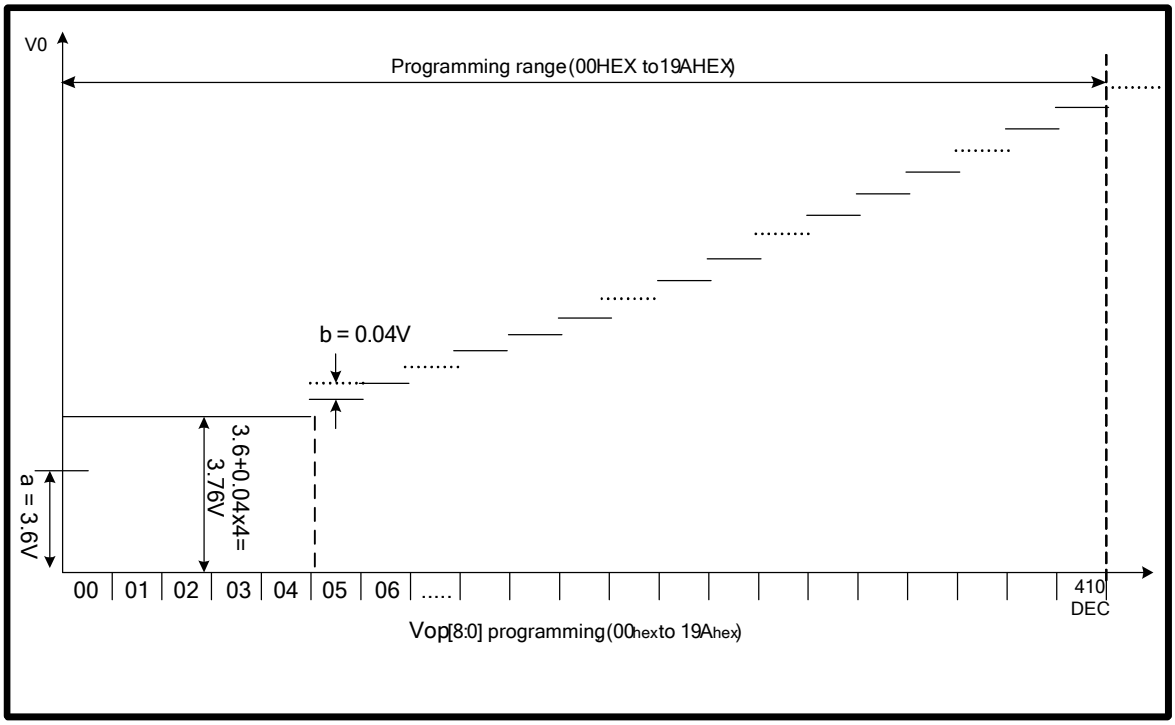

Figure 7.10-3 V0 programming range

As the programming range for the internally generated V0 voltage is above the limited V0 (18V), users has to ensure while selecting the temperature compensation that under all conditions and including all tolerances that the V0 voltage remains below 18V.

7.10.1.2. SET V0 with temperature compansation (Temperatue ≠ 24℃)

There are 16-line slope in each temperature steps and customer can select one line slope of temperature compensation coefficiency for each temperature step. Each temperature step is 8°C. Please see Figure 7.10-4 as below.

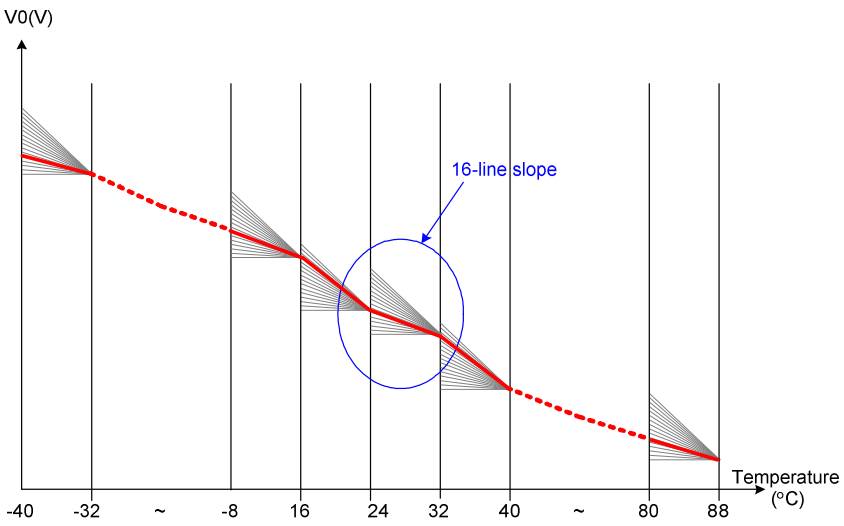

Figure 7.10-4

In command TEMPSEL (see section 9.1.72) each MTx, where x=0, 1, 2,…, E, F, has a value between 0 and 15. MTx = 0 results in 0V increment on V0, MTx = 1 results in Mx=5mV increment, …, MTx = 15 results in Mx=15x5mV=75mV increment. Note that each MTx individually corresponds to a temperature interval; The relations between Mx and V0 quantity due to temperature V0(T) are described in the equations shown as follows:

Temperature range	Equation V0(V) at temperature=T℃
-40℃ ≦ T ＜ -32℃	$V0(T) = V0(T_{24}) + (-32-T) \cdot M0 + (M1 + M2 + M3 + M4 + M5 + M6 + M7) \cdot 8$
-32℃ ≦ T ＜ -24℃	$V0(T) = V0(T_{24}) + (-24-T) \cdot M1 + (M2 + M3 + M4 + M5 + M6 + M7) \cdot 8$
-24℃ ≦ T ＜ -16℃	$V0(T) = V0(T_{24}) + (-16-T) \cdot M2 + (M3 + M4 + M5 + M6 + M7) \cdot 8$
-16℃ ≦ T ＜ -8℃	$V0(T) = V0(T_{24}) + (-8-T) \cdot M3 + (M4 + M5 + M6 + M7) \cdot 8$
-8℃ ≦ T ＜ 0℃	$V0(T) = V0(T_{24}) + (0-T) \cdot M4 + (M5 + M6 + M7) \cdot 8$
0℃ ≦ T ＜ 8℃	$V0(T) = V0(T_{24}) + (8-T) \cdot M5 + (M6 + M7) \cdot 8$
8℃ ≦ T ＜ 16℃	$V0(T) = V0(T_{24}) + (16-T) \cdot M6 + M7 \cdot 8$
16℃ ≦ T ＜ 24℃	$V0(T) = V0(T_{24}) + (24-T) \cdot M7$
24℃ ≦ T ＜ 32℃	$V0(T) = V0(T_{24}) - (T-24) \cdot M8$
32℃ ≦ T ＜ 40℃	$V0(T) = V0(T_{24}) - (T-32) \cdot M9 - M8 \cdot 8$
40℃ ≦ T ＜ 48℃	$V0(T) = V0(T_{24}) - (T-40) \cdot M10 - (M9 + M8) \cdot 8$
48℃ ≦ T ＜ 56℃	$V0(T) = V0(T_{24}) - (T-48) \cdot M11 - (M10 + M9 + M8) \cdot 8$
56℃ ≦ T ＜ 64℃	$V0(T) = V0(T_{24}) - (T-56) \cdot M12 - (M11 + M10 + M9 + M8) \cdot 8$
64℃ ≦ T ＜ 72℃	$V0(T) = V0(T_{24}) - (T-64) \cdot M13 - (M12 + M11 + M10 + M9 + M8) \cdot 8$
72℃ ≦ T ＜ 80℃	$V0(T) = V0(T_{24}) - (T-72) \cdot M14 - (M13 + M12 + M11 + M10 + M9 + M8) \cdot 8$
80℃ ≦ T ＜ 88℃	$V0(T) = V0(T_{24}) - (T-80) \cdot M15 - (M14 + M13 + M12 + M11 + M10 + M9 + M8) \cdot 8$

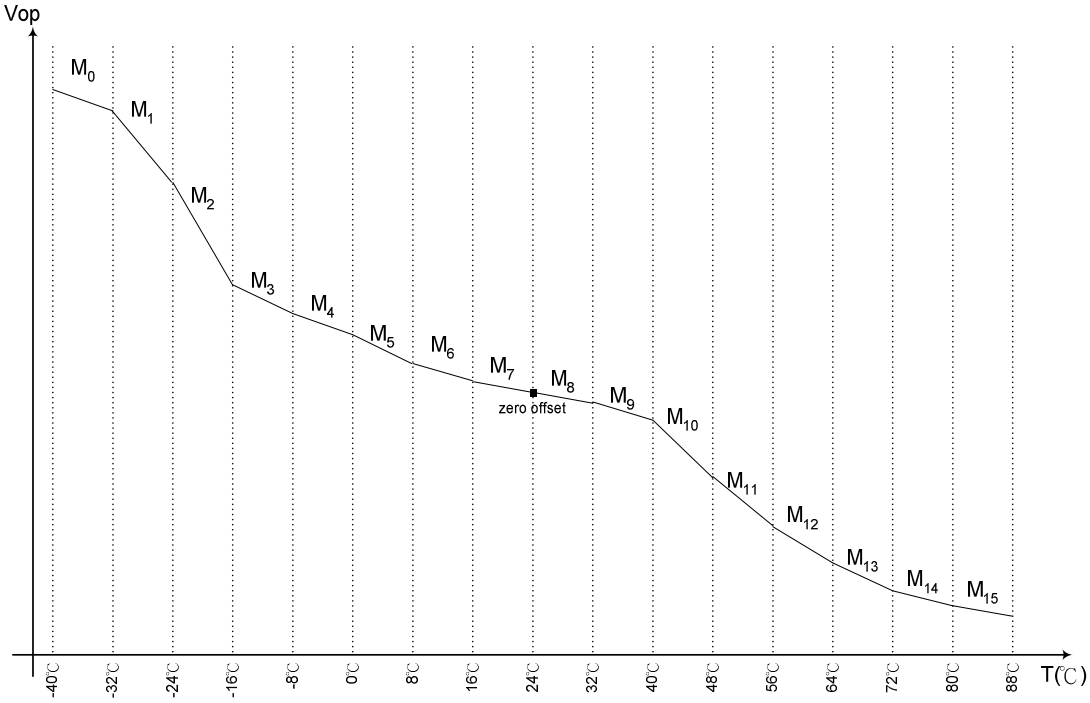

Note:

Please make sure to avoid any kind of heating source closing to ST7637 such as back light, to prevent Vop is not anticipative because of temperature compensate circuit worked.

Setting example for default TC curve

COMMAND	
0xF4	
DATA	
1st: 0xFF	2nd: 0x36
3rd: 0x04	4th: 0x00
5th: 0x33	6th: 0x42
7th: 0XC4	8th: 0x59

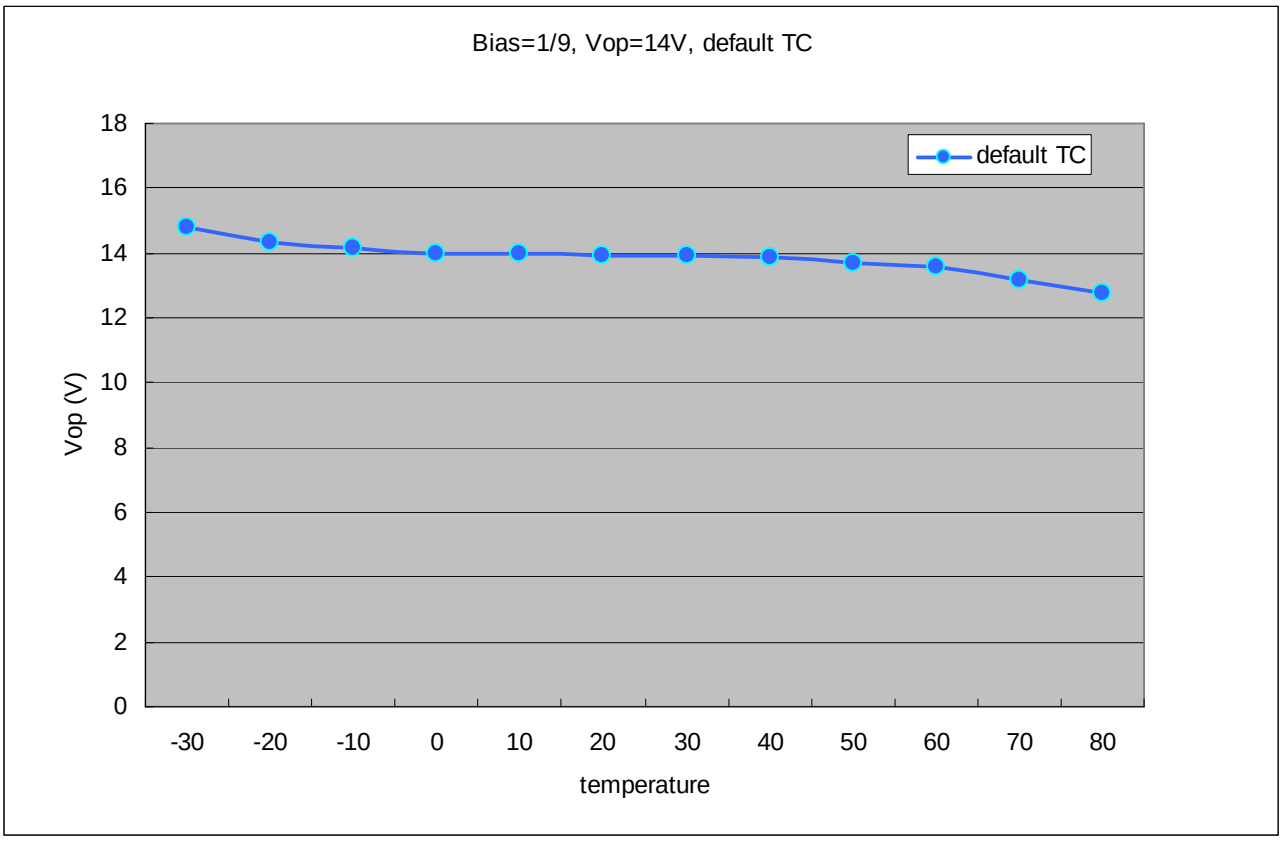

Setting example for TC curve=-0.06%/℃

COMMAND	
0xF4	
DATA	
1st: 0x33	2nd: 0x33
3rd: 0x33	4th: 0x33
5th: 0x33	6th: 0x33
7th: 0x33	8th: 0x33

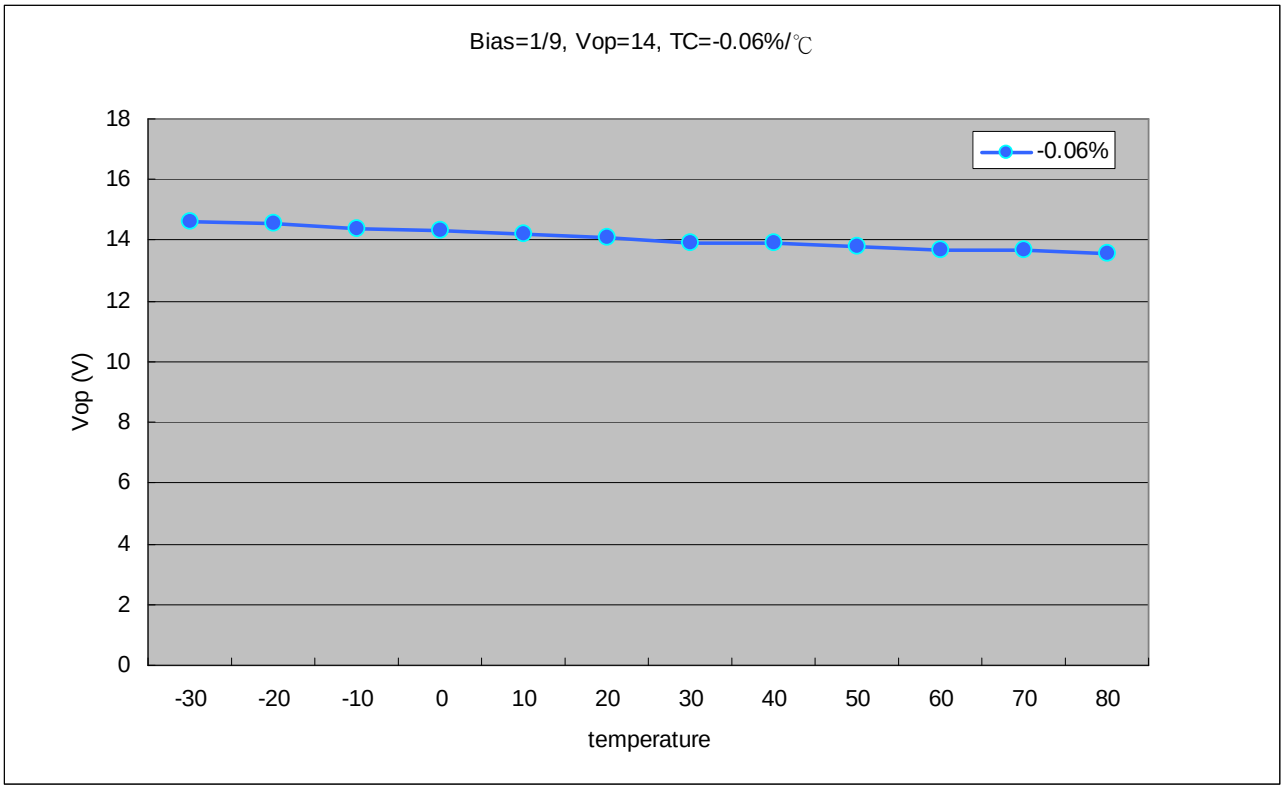

Setting example for TC curve=-0.09%/℃

COMMAND	
0xF4	
DATA	
1st: 0x44	2nd: 0x44
3rd: 0x44	4th: 0x44
5th: 0x44	6th: 0x44
7th: 0x44	8th: 0x44

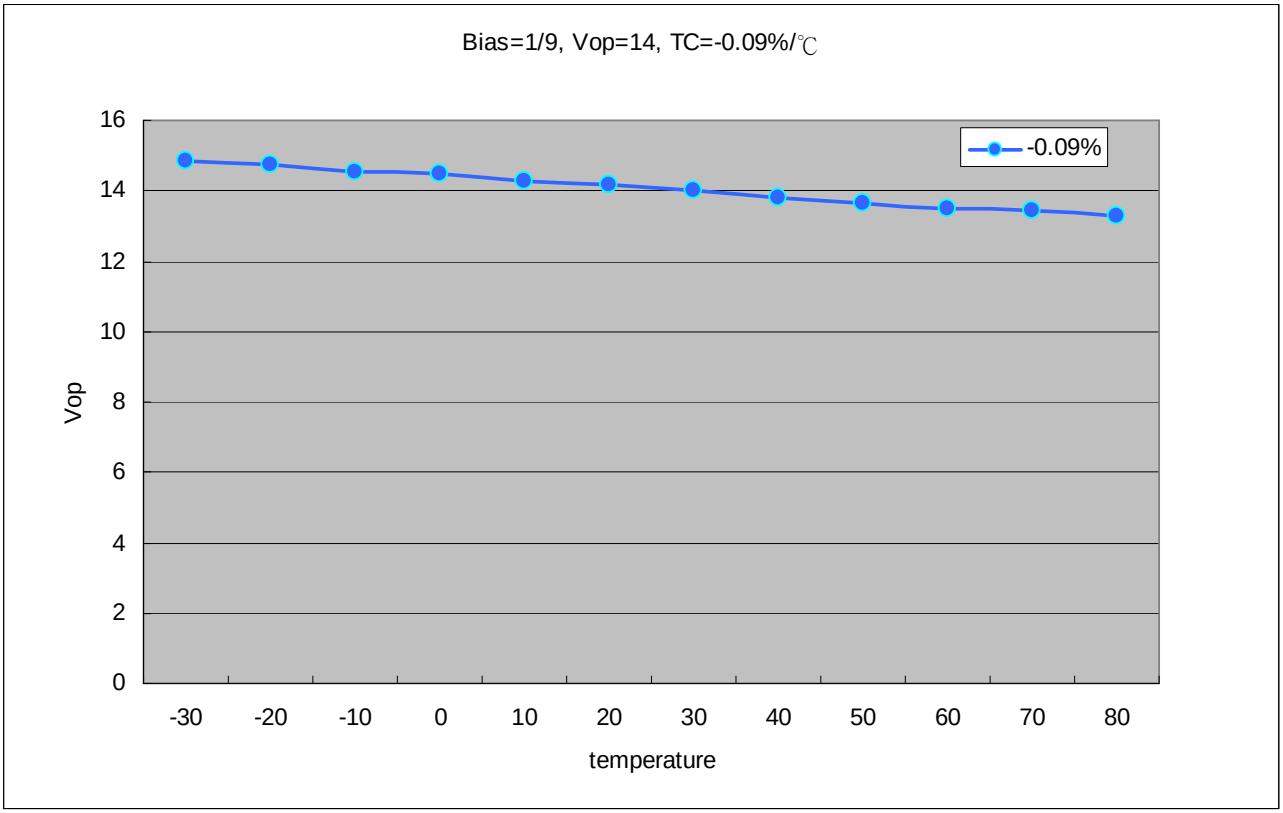

Setting example for TC curve=-0.15%/℃

COMMAND	
0xF4	
DATA	
1st: 0x55	2nd: 0x55
3rd: 0x55	4th: 0x55
5th: 0x55	6th: 0x55
7th: 0x55	8th: 0x55

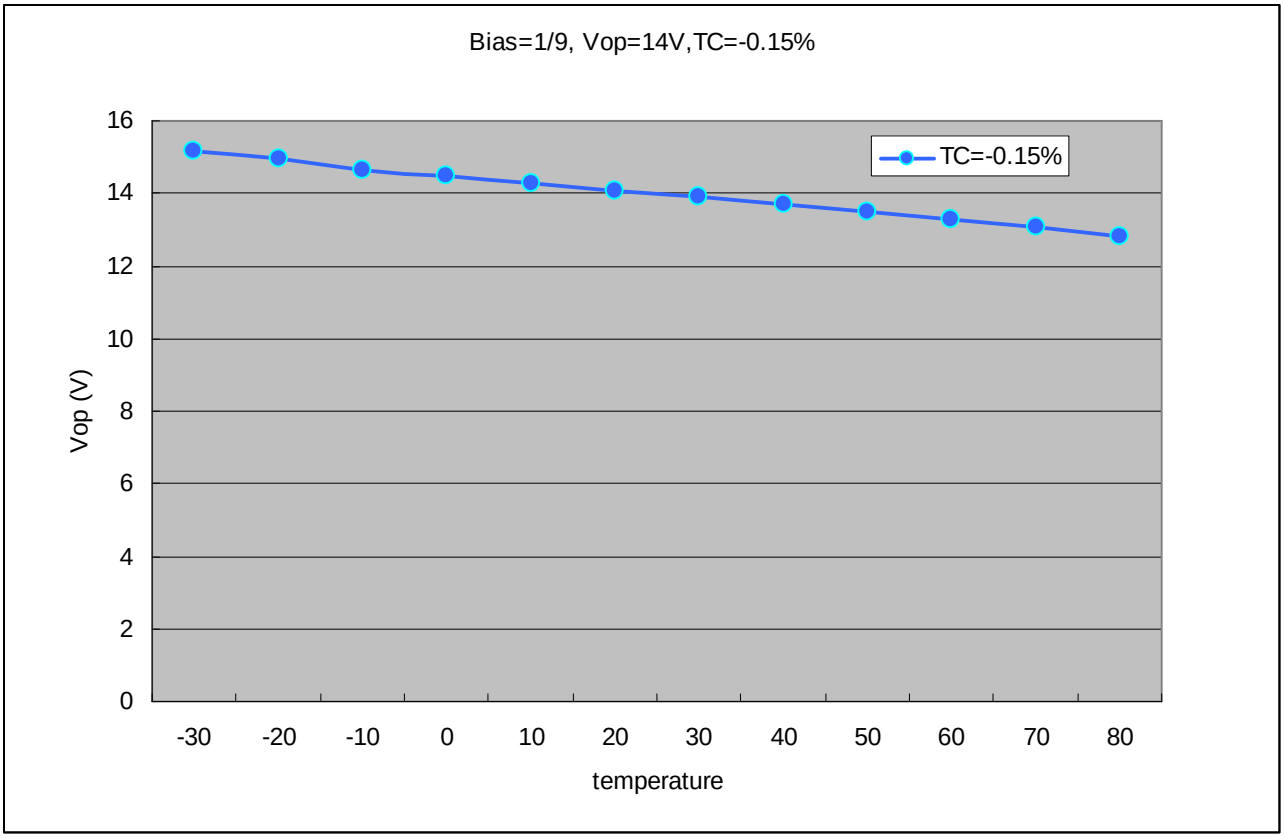

7.10.1.3. V0 fine tuning

ST7637 has 2 commands for fine tuning V0. These commands are VopOfsetInc (see section 9.1.47) and VopOfsetDec (see section 9.1.48). When writing VopOfsetInc into IC for each time, V0 would increase 40mV; when writing VopOfsetDec into IC for each time, V0 would decrease 40mV.

Example:

Vop[8:0]=011010010

EV[6:0]=0111111

VopOfsetInc x2

→ V0=3.6 + { 210 + (63-63) } x 0.04 + 0.04x2 =12.08 (V)

7.10.2. Voltage Follower Circuits

There is a build-in voltage follower circuits in ST7637 for generating Vg and Vm. These voltages are decided by bias ratio selection circuitry which is set by users with software to control 1/5 to 1/12 bias ratios to match the optimum display performance of LCD panel. Bias driving rule is listed below:

LCD bias	Vg	Vm
1/N bias	(2/N) x V0	(1/N) x V0

N=5 to 12

7.10.3. OTP Setting Flow

ST7637 provides the Write and Read function to write the electronic control value and built-in resistance ratio into built-in OTP, and then read them from it. Using the Write and Read functions, you can store these values appropriate to each LCD panel. This function is very convenient for user in setting from some different panel's voltage. But using this function must attention the setting procedure. Please see the following diagram.

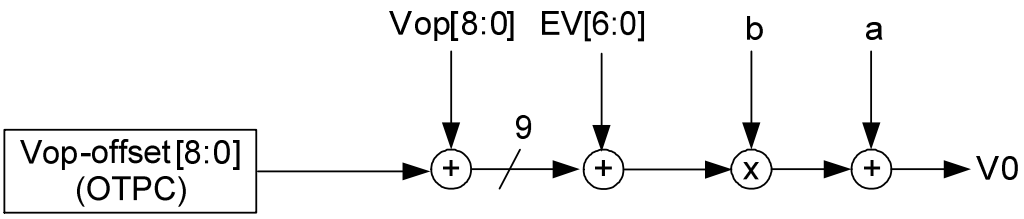

Figure 7.10-5 V0 value control for different modules by loading Vop offset

Note1: This setting flow is used for LCM assembler.

Note2: OTP shouldn't be written without preceding loading correctly from OTP in order to avoid some errors during IC operation.

Note3: When writing value to OTP, the voltage of VPP must be more than 7.5V (7.5V~7.75V); the current of Ivpp must be more than 4 mA.

Note4: If the OTP is exposed to a high temperature for hours, data in the memory cell may probably be lost before the data retention guarantee period. To retain data in the memory cell, keep the memory cell below 90℃. The data retention guarantee period is specified including the retention period.

7.11 Frquency Temperature Gradient Compensation Coefficient

ST7637 will auto-switch frame rate on different temperature such as Figure 7.11-1. TA,TB and TC are frame rate switching temperatures which can be defined by customer with command TMPRNG(see section 9.1.70). FA, FB, FC and FD are switched frame rate which also can be defined by customer with command FRMSEL (see section 9.1.65). The frame rate range is from 37.5Hz to 170Hz.

When the temperature is in increasing state, frame rate changes to the higher step at TA/TB/TC+TH(℃). When the temperature is in decreasing state, frame rate changes to the lower step at TA/TB/TC. For example: TC=10℃ and TH=5℃, FC switches to FD at 15℃ but FD switches to FC at 10℃. Please take Figure 7.11-1 for reference.

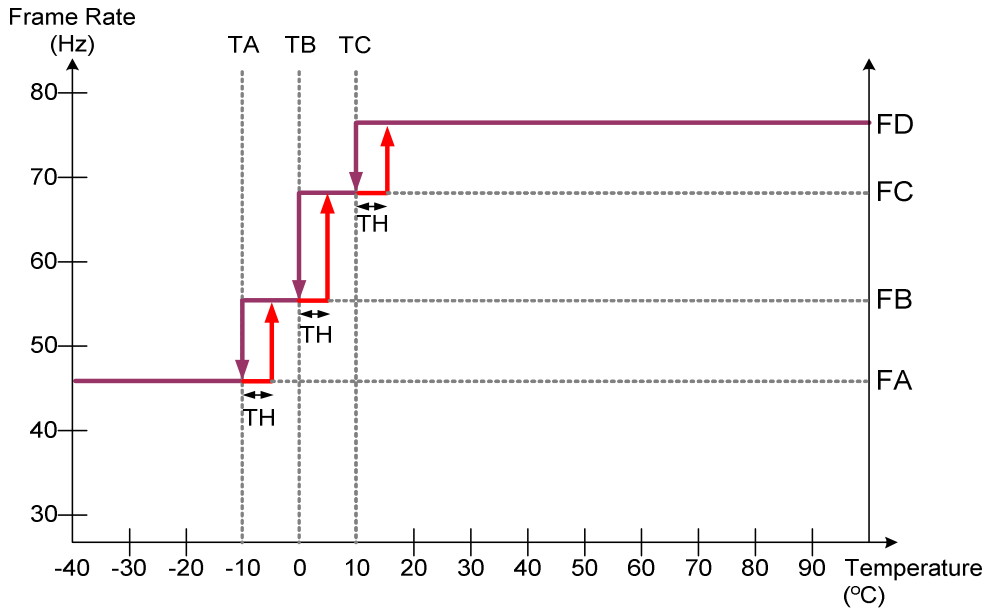

Figure 7.11-1

7.11.1. LCM Glass Detection (Function Reserved)

Sleep Out-command is a trigger for an internal function of the display module, which indicates, if the display glass of the display module is broken or not.

This feature uses bit-4 (D4) in the parameter of command “Read Display Self-Diagnostic Result (0Fh)” (=RDDSDR) as the indicator. If this display glass is broken, this bit (D4) is set to 0.

The following figure is a reference of how this glass break detection can be implemented. For example, there is connected together 2 bumps (DETGBI and DETGBO) via route of ITO. This route of ITO is the nearest route of the edge of the display glass.

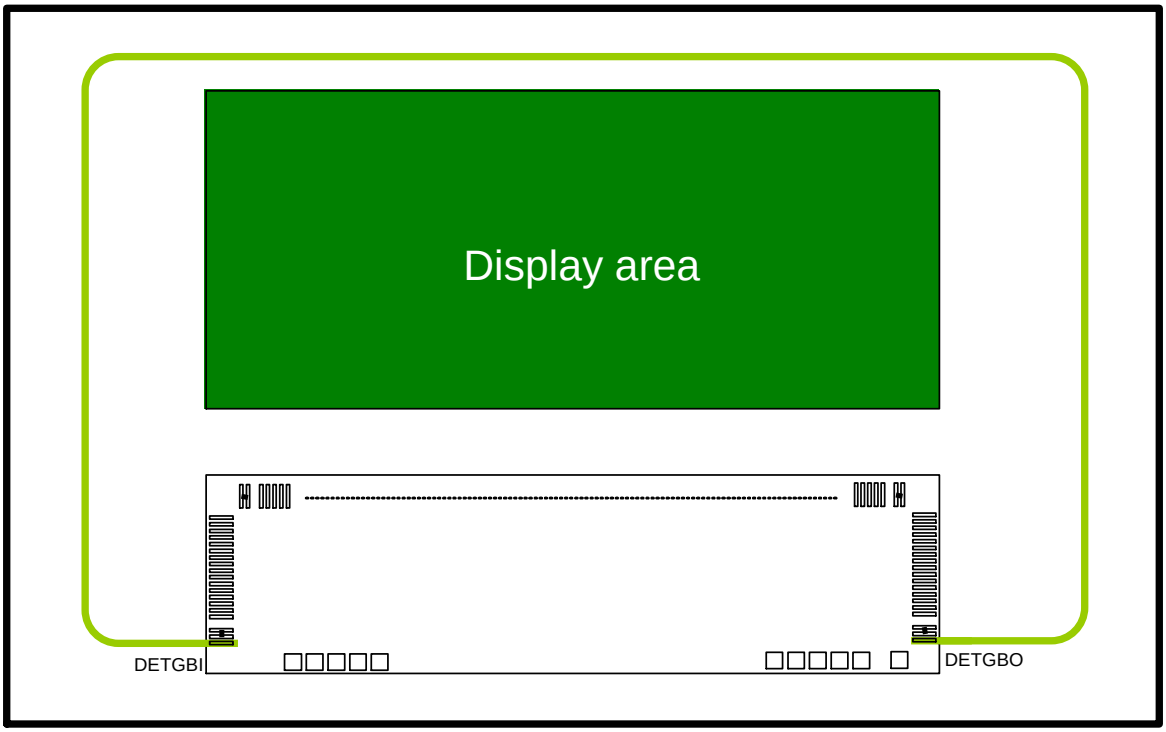

8. RESET CIRCUIT

The registers that are initialized are listed below.

Item	After Power On	After Software Reset	After Hardware Reset
Frame memory (RAM data)	Random	No Change	No Change
RDDID	TBD	TBD	TBD
RDDPM	08h	08h	08h
RDDMADCTR	00h	No Change	00h
RDDCOLMOD	05h (16-Bit/Pixel)	No Change	05h (16-Bit/Pixel)
RDDIM	00h	00h	00h
RDDSM	00h	00h	00h
RDDSDR	00h	00h	00h
Sleep In/Out	In	In	In
Display mode (normal/partial)	Normal	Normal	Normal
Display Inversion On/Off	Off	Off	Off
All Pixel Off mode	Disable	Disable	Disable
All Pixel On mode	Disable	Disable	Disable
Contrast (EV)	3Fh	3Fh	3Fh
Display On/Off	Display Off	Display Off	Display Off
Column: Start Address (XS)	00h	00h	00h
Column: End Address (XE)	83h	83h (when MV=0) 83h (when MV=1)	83h
Row: Start Address (YS)	00h	00h	00h
Row: End Address (YE)	83h	83h (when MV=0) 83h (when MV=1)	83h
Color set	Random	Contents of the look-up table protected	Random
Partial: Start Address (PS)	00h	00h	00h
Partial: End Address (PE)	83h	83h	83h
Scroll: Top Fixed Area (TFA)	00h	00h	00h
Scroll: Scroll Area (VSA)	84h	84h	84h
Scroll: Bottom Fixed Area (BFA)	00h	00h	00h
TE On/Off	Off	Off	Off
TE Mode	0 (Mode1)	0 (Mode1)	0 (Mode1)
Memory Data Access Control MY/MX/MV/ML/RGB)	0/0/0/0/0	No Change	0/0/0/0/0
Scroll Start Address (SSA)	00h	00h	00h
Idle Mode On/Off	Off	Off	Off
Interface Color Pixel Format (P)	05h (16Bit/Pixel)	No change	05h (16Bit/Pixel)
ID1	Set by customer	Set by customer	Set by customer
ID2	Set by customer	Set by customer	Set by customer
ID3	Set by customer	Set by customer	Set by customer
Drive Duty	83h	83h	83h
First Common	00h	00h	00h
FOSC Divider	No division	No division	No division

Item	After Power On	After Software Reset	After Hardware Reset
Vop	0D2h	0D2h	0D2h
Vop Offset increase/decrease	disable	disable	disable
Bias	1/9 Bias	1/9 Bias	1/9 Bias
Booster setting	8x	8x	8x
Booster Efficiency	01	01	01
Vg source	From 2VDD2	From 2VDD2	From 2VDD2
EPCTIN	0	0	0
OTP selection	Disable	Disable	Disable
Frame Frequency in Normal Color (FA/FB/FC/FD)	46Hz/61.5Hz/72Hz/77Hz	46Hz/61.5Hz/72Hz/77Hz	46Hz/61.5Hz/72Hz/77Hz
Frame Frequency in 8-Color (Idle) (F8A/F8B/F8C/F8D)	46Hz/61.5Hz/72Hz/77Hz	46Hz/61.5Hz/72Hz/77Hz	46Hz/61.5Hz/72Hz/77Hz
Temperature Range (TA/TB/TC)	-10℃/0℃/10℃	-10℃/0℃/10℃	-10℃/0℃/10℃
Temperature Hysteresis (TH)	6℃	6℃	6℃
TEMPSEL	Refer to 9.1.72	Refer to 9.1.72	Refer to 9.1.72

9. INSTRUCTIONS

9.1 Instruction table

Command Table-1 , /EXT= H , L, or floating														
Hex	***Command***	***A0***	***/RD***	***/WR***	***D7***	***D6***	***D5***	***D4***	***D3***	***D2***	***D1***	***D0***	***Function***	***Ref***
(00h)	NOP	0	1	0	0	0	0	0	0	0	0	0	No Operation	9.1.1
(01h)	SWRESET	0	1	0	0	0	0	0	0	0	0	1	Software reset	9.1.2
(04h)	RDDID	0	1	0	0	0	0	0	0	1	0	0	Read Display ID	9.1.3
-		1	0	1	-	-	-	-	-	-	-	-	Dummy read	
-		1	0	1	ID17	ID16	ID15	ID14	ID13	ID12	ID11	ID10	ID1 read (D23-D16)	
-		1	0	1	1	ID26	ID25	ID24	ID23	ID22	ID21	ID20	ID2 read (D15-D8)	
-		1	0	1	ID37	ID36	ID35	ID34	ID33	ID32	ID31	ID30	ID3 read (D7-D0)	
(09h)	RDDST	0	1	0	0	0	0	0	1	0	0	1	Read Display Status	9.1.4
-		1	0	1	-	-	-	-	-	-	-	-	Dummy read	
-		1	0	1	ST31	ST30	ST29	ST28	ST27	ST26	ST25	ST24	(D31-D24)	
-		1	0	1	ST23	ST22	ST21	ST20	ST19	ST18	ST17	ST16	(D23-D16)	
-		1	0	1	ST15	ST14	ST13	ST12	ST11	ST10	ST9	ST8	(D15-D8)	
-		1	0	1	ST7	ST6	ST5	ST4	ST3	ST2	ST1	ST0	(D7-D0)	
(0Ah)	RDDPM	0	1	0	0	0	0	0	1	0	1	0	Read Display Power Mode	9.1.5
-		1	0	1	-	-	-	-	-	-	-	-	Dummy read	
-		1	0	1	D7	D6	D5	D4	D3	D2	0	0	-	
(0Bh)	RDDMADCTR	0	1	0	0	0	0	0	1	0	1	1	Read Display MADCTR	9.1.6
-		1	0	1	-	-	-	-	-	-	-	-	Dummy read	
-		1	0	1	D7	D6	D5	D4	D3	0	0	0	-	
(0Ch)	**RDDCOLMOD**	0	1	0	0	0	0	0	1	1	0	0	Read Display Pixel Format	9.1.7
-		1	0	1	-	-	-	-	-	-	-	-	Dummy read	
-		1	0	1	0	0	0	0	0	D2	D1	D0	-	
(0Dh)	RDDIM	0	1	0	0	0	0	0	1	1	0	1	Read Display Image Mode	9.1.8
-		1	0	1	-	-	-	-	-	-	-	-	Dummy read	
-		1	0	1	D7	0	D5	D4	D3	0	0	0	-	
(0Eh)	RDDSM	0	1	0	0	0	0	0	1	1	1	0	Read Display Image Mode	9.1.9
-		1	0	1	-	-	-	-	-	-	-	-	Dummy read	
-		1	0	1	D7	D6	0	0	0	0	0	0	-	
(0Fh)	RDDSDR	0	1	0	0	0	0	0	1	1	1	1	Read Display Self-diagnostic result	9.1.10
-		1	0	1	-	-	-	-	-	-	-	-	Dummy read	
		1	0	1	1	1	1	D4	0	0	0	0	-	

(10h)	SLPIN	0	1	0	0	0	0	1	0	0	0	0	Sleep in & booster off	9.1.11
(11h)	SLPOUT	0	1	0	0	0	0	1	0	0	0	1	Sleep out & booster on	9.1.12
(12h)	PTLON	0	1	0	0	0	0	1	0	0	1	0	Partial mode on	9.1.13
(13h)	NORON	0	1	0	0	0	0	1	0	0	1	1	Partial off (Normal)	9.1.14
(20h)	INVOFF	0	1	0	0	0	1	0	0	0	0	0	Display inversion off (normal)	9.1.15
(21h)	INVON	0	1	0	0	0	1	0	0	0	0	1	Display inversion on	9.1.16
(22h)	APOFF	0	1	0	0	0	1	0	0	0	1	0	All pixel off (Only for test purpose)	9.1.17
(23h)	APON	0	1	0	0	0	1	0	0	0	1	1	All pixel on (Only for test purpose)	9.1.18
(25h)	WRCNTR	0	1	0	0	0	1	0	0	1	0	1	Write contrast	9.1.19
-		1	1	0	0	EV6	EV5	EV4	EV3	EV2	EV1	EV0	EV = 0 to 127	
(28h)	DISPOFF	0	1	0	0	0	1	0	1	0	0	0	Display off	9.1.20
(29h)	DISPON	0	1	0	0	0	1	0	1	0	0	1	Display on	9.1.21
(2Ah)	CASET	0	1	0	0	0	1	0	1	0	1	0	Column address set	9.1.22
		1	1	0	XS7	XS6	XS5	XS4	XS3	XS2	XS1	XS0	X_ADR start: 0≦XS≦83h	
		1	1	0	XE7	XE6	XE5	XE4	XE3	XE2	XE1	XE0	X_ADR end: XS≦XE ≦83h	
(2Bh)	RASET	0	1	0	0	0	1	0	1	0	1	1	Row address set	9.1.23
		1	1	0	YS7	YS6	YS5	YS4	YS3	YS2	YS1	YS0	Y_ADR start: 0≦YS≦83h	
		1	1	0	YE7	YE6	YE5	YE4	YE3	YE2	YE1	YE0	Y_ADR end: YS≦YE≦83h	
(2Ch)	RAMWR	0	1	0	0	0	1	0	1	1	0	0	Memory write	9.1.24
		1	1	0	D7	D6	D5	D4	D3	D2	D1	D0	Write data	
(2Dh)	RGBSET	0	1	0	0	0	1	0	1	1	0	1	Color set for 256 or 4k color display	9.1.25
-		1	1	0	-	-	-	R4	R3	R2	R1	R0	Red tone (00000)	
-		1	1	0	:	:	:	:	:	:	:	:	: -	
-		1	1	0	-	-	-	R4	R3	R2	R1	R0	Red tone (11111)	
-		1	1	0	-	-	G5	G4	G3	G2	G1	G0	Green tone (000000)	
		1	1	0	:	:	:	:	:	:	:	:	: -	
		1	1	0	-	-	G5	G4	G3	G2	G1	G0	Green tone (111111)	
		1	1	0	-	-	-	B4	B3	B2	B1	B0	Blue tone (00000)	
		1	1	0	:	:	:	:	:	:	:	:	: -	
		1	1	0	-	-	-	B4	B3	B2	B1	B0	Blue tone (11111)	
(2Eh)	RAMRD	0	1	0	0	0	1	0	1	1	1	0	Memory Read	9.1.26
		1	1	0	-	-	-	-	-	-	-	-	Dummy read	
		1	1	0	D7	D6	D5	D4	D3	D2	D1	D0		
(30h)	PTLAR	0	1	0	0	0	1	1	0	0	0	0	Partial start/end address set	9.1.27

-		1	1	0	PS7	PS6	PS5	PS4	PS3	PS2	PS1	PS0	Start address (0~131)	
-		1	1	0	PE7	PE6	PE5	PE4	PE3	PE2	PE1	PE0	End address (0~131)	
(33h)	SCRLAR	0	1	0	0	0	1	1	0	0	1	1	Scroll Area	9.1.28
-		1	1	0	TFA7	TFA6	TFA5	TFA4	TFA3	TFA2	TFA1	TFA0	TFA=0~132	
-		1	1	0	VSA7	VSA6	VSA5	VSA4	VSA3	VSA2	VSA1	VSA0	VSA=0~132	
-		1	1	0	BFA7	BFA6	BFA5	BFA4	BFA3	BFA2	BFA1	BFA0	BFA=0~132	
(34h)	TEOFF	0	1	0	0	0	1	1	0	1	0	0	Tearing effect line off	9.1.29
(35h)	TEON	0	1	0	0	0	1	1	0	1	0	1	Tearing effect mode set & on	9.1.30
-		1	1	0	-	-	-	-	-	-	-	M	“0”: mode1, “1”: mode2	
(36h)	MADCTR	0	1	0	0	0	1	1	0	1	1	0	Memory data access control	9.1.31
-		1	1	0	MY	MX	MV	ML	RGB	-	-	-	-	
(37h)	VSCSAD	0	1	0	0	0	1	1	0	1	1	1	Scroll start address of RAM	9.1.32
		1	1	0	SSA7	SSA6	SSA5	SSA4	SSA3	SSA2	SSA1	SSA0	SSA = 0~131	
(38h)	IDMOFF	0	1	0	0	0	1	1	1	0	0	0	Idle mode off	9.1.33
(39h)	IDMON	0	1	0	0	0	1	1	1	0	0	1	Idle mode on	9.1.34
(3Ah)	COLMOD	0	1	0	0	0	1	1	1	0	1	0	Interface pixel format	9.1.35
-		1	1	0	-	-	-	-	-	P2	P1	P0	Interface format	
(DAh)	RDID1	0	1	0	1	1	0	1	1	0	1	0	Read ID1	9.1.36
-		1	0	1	-	-	-	-	-	-	-	-	Dummy read	
-		1	0	1	ID17	ID16	ID15	ID14	ID13	ID12	ID11	ID10	(D7-D0)	
(DBh)	RDID2	0	1	0	1	1	0	1	1	0	1	1	Read ID2	9.1.37
-		1	0	1	-	-	-	-	-	-	-	-	Dummy read	
-		1	0	1	ID27	ID26	ID25	ID24	ID23	ID22	ID21	ID20	(D7-D0)	
(DCh)	RDID3	0	1	0	1	1	0	1	1	1	0	0	Read ID3	9.1.38
-		1	0	1	-	-	-	-	-	-	-	-	Dummy read	
-		1	0	1	ID37	ID36	ID35	ID34	ID33	ID32	ID31	ID30	(D7-D0)	

Note 1: When /EXT connects to H or floating, commands which are not defined in “Command Table-1” are treated as NOP (00H) command.

Note 2: Commands 10H, 12H, 13H, 20H, 21H, 25H, 28H, 29H, 30H, 36H (Bit ML only), 38H and 39H are updated during V-sync when Module is in Sleep Out Mode to avoid abnormal visual effects.

During Sleep In mode, these commands are updated immediately.

Read status (09H), Read Display Power Mode (0AH), Read Display MADCTR (0BH), Read Display Pixel Format (0CH), Read Display Image Mode (0DH), Read Display Signal Mode (0EH) and Read Display Self Diagnostic Result (0FH) of these commands is updated immediately both in Sleep In mode and Sleep Out mode.

Command Table-2 , /EXT= L or command D7h[7] enable														
Hex	**Command**	**A0**	**/RD**	**/WR**	**D7**	**D6**	**D5**	**D4**	**D3**	**D2**	**D1**	**D0**	**Function**	**Ref**
(B0h)	DutySet	0	1	0	1	0	1	1	0	0	0	0	Display Duty setting	9.1.39
		1	1	0	Du7	Du6	Du5	Du4	Du3	Du2	Du1	Du0		
(B1h)	FirstCom	0	1	0	1	0	1	1	0	0	0	1	First Com. Page address	9.1.40
		1	1	0	--	F6	F5	F4	F3	F2	F1	F0		
(B3h)	OscDiv	0	1	0	1	0	1	1	0	0	1	1	FOSC divider	9.1.41
		1	1	0	-	-	-	-	-	-	CLD1	CLD0		
(B5h)	NLInvSet	0	1	0	1	0	1	1	0	1	0	1	N-line control	9.1.42
		1	1	0	M	N6	N5	N4	N3	N2	N1	N0		
(B7h)	ComScanDir	0	1	0	1	0	1	1	0	1	1	1	Com/Seg Scan Direction for Glass layout	9.1.43
		1	1	0	0	SMX	0	0	**SBGR**	0	-	-		
(B8h)	RmwIn	0	1	0	1	0	1	1	1	0	0	0	read modify write control IN	9.1.44
(B9h)	RmwOut	0	1	0	1	0	1	1	1	0	0	1	read modify write control Out	9.1.45
(C0h)	VopSet	0	1	0	1	1	0	0	0	0	0	0	Vop setting	9.1.46
		1	1	0	Vop7	Vop6	Vop5	Vop4	Vop3	Vop2	Vop1	Vop0		
		1	1	0	-	-	-	-	-	-	-	Vop8		
(C1h)	VopOfsetInc	0	1	0	1	1	0	0	0	0	0	1	+40mv/setp	9.1.47
(C2h)	VopOfsetDec	0	1	0	1	1	0	0	0	0	1	0	-40mv/setp	9.1.48
(C3h)	BiasSel	0	1	0	1	1	0	0	0	0	1	1	Bias selection	9.1.49
		1	1	0	-	-	-	-	-	Bias2	Bias1	Bias0		
(C4h)	BstBmpXSel	0	1	0	1	1	0	0	0	1	0	0	Booster setting	9.1.50
		1	1	0	-	-	-	-	-	BST2	BST 1	BST0		
(C5h)	BstEffSel	0	1	0	1	1	0	0	0	1	0	1	Booster efficiency selection	9.1.51
		1	1	0	-	-	-	-	-	-	BTF1	BTF0		
(C7h)	VopOffset	0	1	0	1	1	0	0	0	1	1	1		9.1.52
		1	1	0	VOS7	VOS6	VOS5	VOS4	VOS3	VOS2	VOS1	VOS0		
		1	1	0	-	-	-	-	-	-	-	VOS8		
(CBh)	VgSorcSel	0	1	0	1	1	0	0	1	0	1	1	FV3 with Booster x2 control	9.1.53
		1	1	0	-	-	-	-	-	-	-	2BT0		
(CCh)	ID1Set	0	1	0	1	1	0	0	1	1	0	0	ID1 setting	9.1.54
		1	1	0	ID1_7	ID1_6	ID1_5	ID1_4	ID1_3	ID1_2	ID1_1	ID1_0		
(CDh)	ID2Set	0	1	0	1	1	0	0	1	1	0	1	ID2 setting	9.1.55

		1	1	0	1	ID2_6	ID2_5	ID2_4	ID2_3	ID2_2	ID2_1	ID2_0		
(CEh)	ID3Set	0	1	0	1	1	0	0	1	1	1	0	ID3 setting	9.1.56
		1	1	0	ID3_7	ID3_6	ID3_5	ID3_4	ID3_3	ID3_2	ID3_1	ID3_0		
(D0h)	ANASET	0	1	0	1	1	0	1	0	0	0	0	Analog circuit setting	9.1.57
		1	1	0	0	0	0	1	1	1	0	1		
(D7h)	AutoLoadSet	0	1	0	1	1	0	1	0	1	1	1	mask rom data auto re-load control	9.1.58
		1	1	0	**EXTE**	**OTPBE**	-	ARD	1	1	1	1		
(DEh)	RDTstStatus	0	1	0	1	1	0	1	1	1	1	0	read IC status	9.1.59
		1	0	1	-	-	-	-	-	-	-	-	Dummy Read	
(E0h)	EPCTIN	0	1	0	1	1	1	0	0	0	0	0	Control OTP WR/RD	9.1.60
		1	1	0	0	0	WR /XRD	0	0	0	0	0		
(E1h)	EPCTOUT	0	1	0	1	1	1	0	0	0	0	1	OTP control cancel	9.1.61
(E2h)	EPMWR	0	1	0	1	1	1	0	0	0	1	0	Write to OTP	9.1.62
(E3h)	EPMRD	0	1	0	1	1	1	0	0	0	1	1	Read from OTP	9.1.63
(E4h)	OTPSEL	0	1	0	1	1	1	0	0	1	0	0	Select OTP	9.1.64
		1	1	0	MS1	MS0	0	1	1	0	0	0		
(E5h)	ROMSET	0	1	0	1	1	1	0	0	1	0	1	Programmable rom setting	9.1.65
		1	1	0	0	0	0	0	1	1	0	0		
(E7h)		0	1	0	1	1	1	0	0	1	1	1	Low voltage mode setting	9.1.66
		1	1	0	0	0	1	0	0	0	1	0		
(E8h)		0	1	0	1	1	1	0	1	0	0	0		
		1	1	0	0	0	1	1	0	1	1	1		
		1	1	0	0	0	0	0	0	0	1	1		
		1	1	0	0	0	0	1	1	1	1	1		
(EBh)	HPMSET	0	1	0	1	1	1	0	1	0	1	1	High power mode setting	9.1.67
		1	1	0	0	0	0	0	0	0	1	0		
		1	1	0	0	0	0	0	0	0	0	1		
(F0h)	FRMSEL	0	1	0	1	1	1	1	0	0	0	0	Frame Freq. in Temp range A,B,C and D	9.1.68
		1	1	0	-	-	-	FA4	FA3	FA2	FA1	FA0		
		1	1	0	-	-	-	FB4	FB3	FB2	FB1	FB0		
		1	1	0	-	-	-	FC4	FC3	FC2	FC1	FC0		
		1	1	0	-	-	-	FD4	FD3	FD2	FD1	FD0		

(F1h)	FRM8SEL	0	1	0	1	1	1	1	0	0	0	1	Frame Freq. in Temp range A,B,C and D (idle)	9.1.69
		1	1	0	-	-	-	F8A4	F8A3	F8A2	F8A1	F8A0		
		1	1	0	-	-	-	F8B4	F8B3	F8B2	F8B1	F8B0		
		1	1	0	-	-	-	F8C4	F8C3	F8C2	F8C1	F8C0		
		1	1	0	-	-	-	F8D4	F8D3	F8D2	F8D1	F8D0		
(F2h)	TMPRNG	0	1	0	1	1	1	1	0	0	1	0	Temp range A,B and C	9.1.70
		1	1	0	-	TA6	TA5	TA4	TA3	TA2	TA1	TA0		
		1	1	0	-	TB6	TB5	TB4	TB3	TB2	TB1	TB0		
		1	1	0	-	TC6	TC5	TC4	TC3	TC2	TC1	TC0		
(F3h)	TMPHYS	0	1	0	1	1	1	1	0	0	1	1	Hysteresis value set	9.1.71
		1	1	0	-	-	-	-	TH3	TH2	TH1	TH0		
(F4h)	TEMPSEL	0	1	0	1	1	1	1	0	1	0	0	TEMPSEL	9.1.72
		1	1	0	MT13	MT12	MT11	MT10	MT03	MT02	MT01	MT00		
		1	1	0	MT33	MT32	MT31	MT30	MT23	MT22	MT21	MT20		
		1	1	0	MT53	MT52	MT51	MT50	MT43	MT42	MT41	MT40		
		1	1	0	MT73	MT72	MT71	MT70	MT63	MT62	MT61	MT60		
		1	1	0	MT93	MT92	MT91	MT90	MT83	MT82	MT81	MT80		
		1	1	0	MTB3	MTB2	MTB1	MTB0	MTA3	MTA2	MTA1	MTA0		
		1	1	0	MTD3	MTD2	MTD1	MTD0	MTC3	MTC2	MTC1	MTC0		
		1	1	0	MTF3	MTF2	MTF1	MTF0	MTE3	MTE2	MTE1	MTE0		
(F7h)	THYS	0	1	0	1	1	1	1	0	1	1	1	Temperature detection threshold	9.1.73
		1	1	0	THYS7	THYS6	THYS5	THYS4	THYS3	THYS2	THYS1	THYS0		
(F9h)	Frame Set	0	1	0	1	1	1	1	1	0	0	1	Set Frame RGB value	9.1.74
		1	1	0	-	-	-	P14	P13	P12	P11	P10		
		1	1	0	-	-	-	P24	P23	P22	P21	P20		
		:	:	:	:	:	:	:	:	:	:	:		
		1	1	0	-	-	-	P154	P153	P152	P151	P150		
		1	1	0	-	-	-	P164	P163	P162	P161	P160		

OTPB related register list

Register	Function
0xB7[3]	BGR setting
0xB7[6]	MX setting
0xC3[2:0]	Bias setting
0xC4[2:0]	Booster setting
0xC5[1:0]	Booster efficiency setting
0xCB[0]	Vg source control
0xCC[7:0]	ID1 setting
0xCE[7:0]	ID3 setting

OTPC related register list

Register	Function
0xB5[7:0]	N-line setting
0xC7[8:0]	Vop offset setting
0xCD[6:0]	ID2 setting
0xD7[6]	OTPB auto-read enable
0xD7[7]	External command enable

9.1.1. NOP(00h)

Command	*A0*	*/RD*	*/WR*	*D7*	*D6*	*D5*	*D4*	*D3*	*D2*	*D1*	*D0*	*Hex*
NOP	0	1	0	0	0	0	0	0	0	0	0	**(00h)**
Parameter	No Parameter											

Description	This command is an empty command. It does not have effect on the display module. However it can be used to terminate RAM data write or read as described in RAMWR (Memory Write), RAMRD (Memory Read) and parameter write commands.
Restriction	-
Register Availability	

Status	Availability
Normal Mode On, Idle Mode Off, Sleep Out	Yes
Normal Mode On, Idle Mode On, Sleep Out	Yes
Partial Mode On, Idle Mode Off, Sleep Out	Yes
Partial Mode On, Idle Mode On, Sleep Out	Yes
Sleep In	Yes

Default	

Status	Default Value
Power On Sequence	N/A
S/W Reset	N/A
H/W Reset	N/A

Flow Chart	-

9.1.2. SWRESET: Software Reset (01h)

Command	*A0*	*/RD*	*/WR*	*D7*	*D6*	*D5*	*D4*	*D3*	*D2*	*D1*	*D0*	*Hex*
SWRESET	0	1	0	0	0	0	0	0	0	0	1	**(01h)**
Parameter	No Parameter											

Description	When the Software Reset command is written, it causes a software reset. It resets the commands and parameters to their S/W Reset default values and all segment & common outputs are set to Vm (display off: blank display). (See default tables in each command description) *Note: The Frame Memory contents are not affected by this command.*
Restriction	It will be necessary to wait 5msec before sending new command following software reset. The display module loads all display suppliers' factory default values to the registers during 5msec. If Software Reset is applied during Sleep Out mode, it will be necessary to wait 120msec before sending Sleep Out command. Software Reset command cannot be sent during Sleep Out sequence.
Register Availability	

Status	Availability
Normal Mode On, Idle Mode Off, Sleep Out	Yes
Normal Mode On, Idle Mode On, Sleep Out	Yes
Partial Mode On, Idle Mode Off, Sleep Out	Yes
Partial Mode On, Idle Mode On, Sleep Out	Yes
Sleep In	Yes

Default

Status	Default Value
Power On Sequence	N/A
S/W Reset	N/A
H/W Reset	N/A

Flow Chart

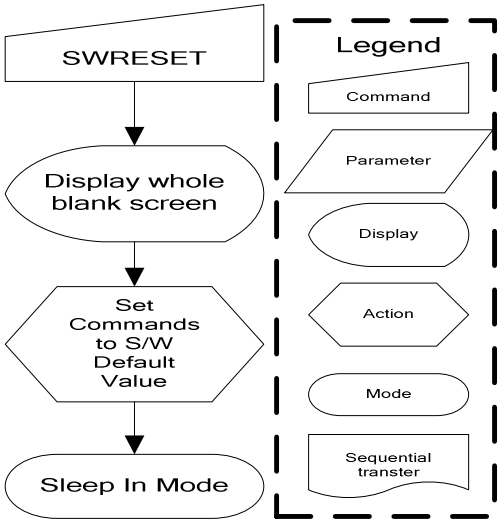

9.1.3. RDDID: Read Display ID (04h)

Command	*A0*	*/RD*	*/WR*	*D7*	*D6*	*D5*	*D4*	*D3*	*D2*	*D1*	*D0*	*Hex*
RDDID	0	1	0	0	0	0	0	0	1	0	0	**(04h)**
Dummy Read	1	0	1	-	-	-	-	-	-	-	-	-
2nd parameter	1	0	1	ID17	ID16	ID15	ID14	ID13	ID12	ID11	ID10	-
3rd parameter	1	0	1	1	ID26	ID25	ID24	ID23	ID22	ID21	ID20	-
4th parameter	1	0	1	ID37	ID36	ID35	ID34	ID33	ID32	ID31	ID30	-

NOTE: "-" Don't care

Description	This read byte returns 24-bit display identification information. The 1st parameter is dummy data The 2nd parameter (ID17 to ID10): LCD module's manufacturer ID. The 3rd parameter (ID26 to ID20): LCD module/driver version ID The 4th parameter (ID37 to ID30): LCD module/driver ID. *NOTE: Commands RDID1/2/3(DAh, DBh, DCh) read data correspond to the parameters 2,3,4 of the command 04h, respectively.*
Restriction	

Register Availability

Status	Availability
Normal Mode On, Idle Mode Off, Sleep Out	Yes
Normal Mode On, Idle Mode On, Sleep Out	Yes
Partial Mode On, Idle Mode Off, Sleep Out	Yes
Partial Mode On, Idle Mode On, Sleep Out	Yes
Sleep In	Yes

Default

Status	Default Value		
	ID1	ID2	ID3
Power On Sequence	0x00	0x80	0x00
S/W Reset	0x00	0x80	0x00
H/W Reset	0x00	0x80	0x00

Flow Chart	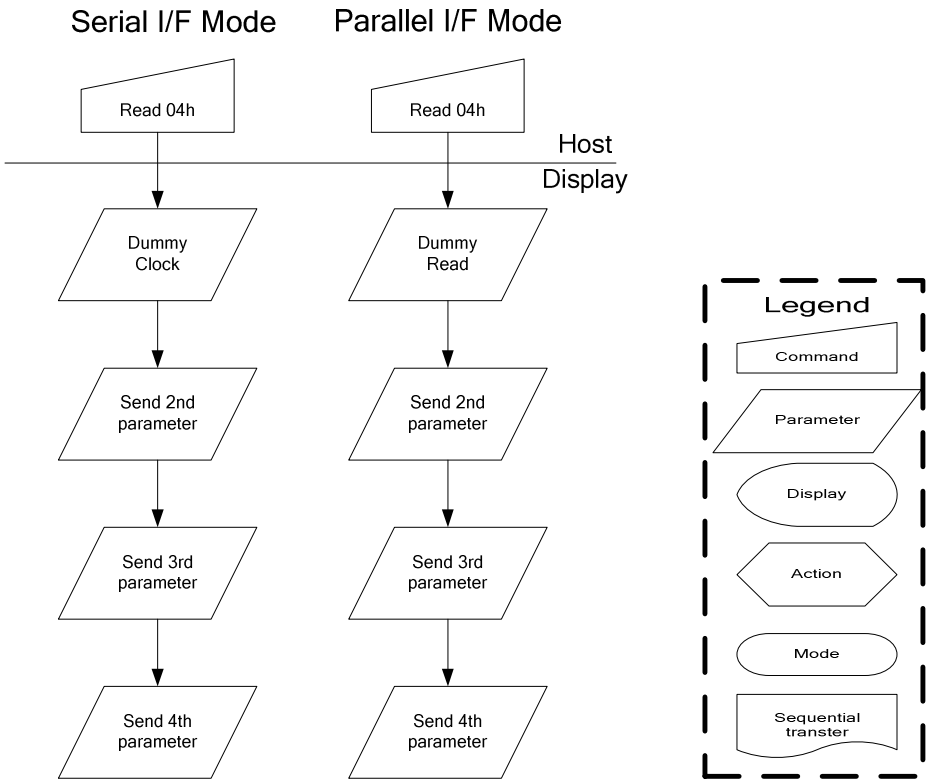

Serial I/F Mode
Parallel I/F Mode
Read 04h
Read 04h
Host
Display
Dummy Clock
Dummy Read
Send 2nd parameter
Send 2nd parameter
Send 3rd parameter
Send 3rd parameter
Send 4th parameter
Send 4th parameter
Legend
Command
Parameter
Display
Action
Mode
Sequential transter

9.1.4. RDDST: Read Display Status (09h)

Command	*A0*	*/RD*	*/WR*	*D7*	*D6*	*D5*	*D4*	*D3*	*D2*	*D1*	*D0*	*Hex*
RDDST	0	1	0	0	0	0	0	1	0	0	1	**(09h)**
Dummy Read	1	0	1	-	-	-	-	-	-	-	-	-
2nd parameter	1	0	1	ST31	ST30	ST29	ST28	ST27	ST26	ST25	ST24	-
3rd parameter	1	0	1	ST23	ST22	ST21	ST20	ST19	ST18	ST17	ST16	-
4th parameter	1	0	1	ST15	ST14	ST13	ST12	ST11	ST10	ST9	ST8	-
5th parameter	1	0	1	ST7	ST6	ST5	ST4	ST3	ST2	ST1	ST0	-

NOTE: "-" Don't care

Description

This command indicates the current status of the display as described in the table below:

Bit	Description	Value
ST31	Booster Voltage Status	"1"=Booster on, "0"=off
ST30	Row Address Order (MY)	"1"=Decrement, "0"=Increment
ST29	Column Address Order (MX)	"1"=Decrement, "0"=Increment
ST28	Row/Column Order (MV)	"1"= Row/column exchange (MV=1) "0"= Normal (MV=0)
ST27	Scan Address Order (ML)	"1"=Decrement, "0"=Increment
ST26	RGB/BGR Order (RGB)	"1"=BGR, "0"=RGB
ST25	Not Used	"0"
ST24	Not Used	"0"
ST23	Not Used	"0"
ST22 ST21 ST20	Interface Color Pixel Format Definition	"010" = 8-bit / pixel, "011" = 12-bit / pixel type A "100" = 12-bit / pixel type B "101" = 16-bit / pixel, "110" = 18-bit / pixel, "111" = 24-bit / pixel
ST19	Idle Mode On/Off	"1" = On, "0" = Off
ST18	Partial Mode On/Off	"1" = On, "0" = Off
ST17	Sleep In/Out	"1" = Out, "0" = In
ST16	Display Normal Mode On/Off	"1" = Normal Display, "0" = Partial Display
ST15	Vertical Scrolling Status	"1" = Scroll on, "0" = Scroll off
ST14	Not Used	"0"
ST13	Inversion Status	"1" = On, "0" = Off
ST12	All Pixels On	"1" = all pixal on, "0" = normal display
ST11	All Pixels Off	"1" = all pixal off, "0" = normal display
ST10	Display On/Off	"1" = On, "0" = Off
ST9	Tearing effect line on/off	"1" = On, "0" = Off
ST8	Not Used	"0"
ST7	Not Used	"0"
ST6	Not Used	"0"
ST5	Tearing effect line mode	"0" = mode1, "1" = mode2
ST4	Not Used	"0"
ST3	Not Used	"0"
ST2	Not Used	"0"
ST1	Not Used	"0"

	ST0	Not Used	“0”

Restriction

Register Availability

Status	Availability
Normal Mode On, Idle Mode Off, Sleep Out	Yes
Normal Mode On, Idle Mode On, Sleep Out	Yes
Partial Mode On, Idle Mode Off, Sleep Out	Yes
Partial Mode On, Idle Mode On, Sleep Out	Yes
Sleep In	Yes

Default

Status	Default Value (ST[31:0])
Power On Sequence	0000 0000_0101 0001_0000 0000_0000 0000
S/W Reset	0xxx xx00_0xxx 0001_0000 0000_0000 0000
H/W Reset	0000 0000_0101 0001_0000 0000_0000 0000

Flow Chart

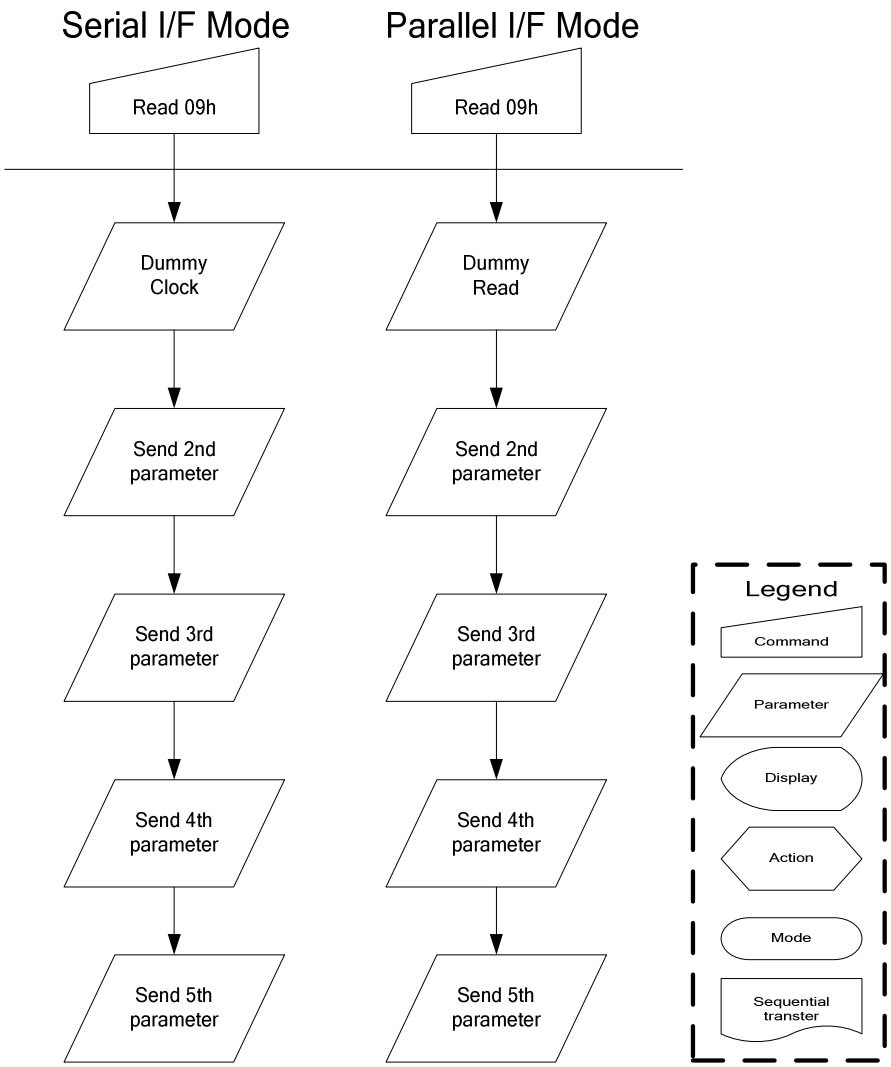

9.1.5. RDDPM: Read Display Power Mode (0Ah)

Command	*A0*	*/RD*	*/WR*	*D7*	*D6*	*D5*	*D4*	*D3*	*D2*	*D1*	*D0*	*Hex*
RDDPM	0	1	0	0	0	0	0	1	0	1	0	**(0Ah)**
Dummy Read	1	0	1	-	-	-	-	-	-	-	-	-
2nd parameter	1	0	1	D7	D6	D5	D4	D3	D2	0	0	-

NOTE: "-" Don't care

Description

This command indicates the current status of the display as described in the table below:

Bit	Description	Value
D7	Booster Voltage Status	"1"=Booster on, "0"=Booster off
D6	Idle Mode On/Off	"1" = Idle Mode On, "0" = Idle Mode Off
D5	Partial Mode On/Off	"1" = Partial Mode On, "0" = Partial Mode
D4	Sleep In/Out	"1" = Sleep Out, "0" = Sleep In
D3	Display Normal Mode On/Off	"1" = Normal Display, "0" = Partial Display
D2	Display On/Off	"1" = Display On, "0" = Display Off
D1	Not Used	"0"
D0	Not Used	"0"

Restriction

Register Availability

Status	Availability
Normal Mode On, Idle Mode Off, Sleep Out	Yes
Normal Mode On, Idle Mode On, Sleep Out	Yes
Partial Mode On, Idle Mode Off, Sleep Out	Yes
Partial Mode On, Idle Mode On, Sleep Out	Yes
Sleep In	Yes

Default

Status	Default Value (D[7:0])
Power On Sequence	00001000b (08h)
S/W Reset	00001000b (08h)
H/W Reset	00001000b (08h)

Flow Chart

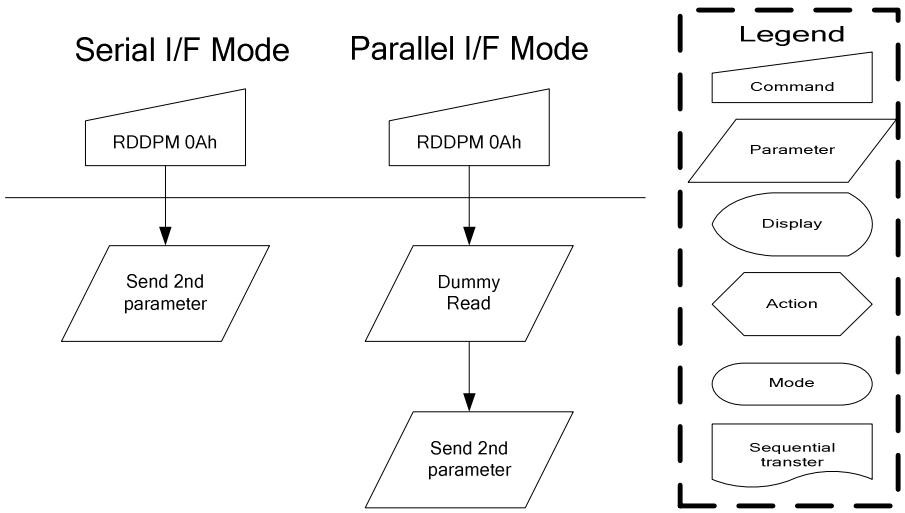

9.1.6. RDDMADCTR: Read Display MADCTR (0Bh)

Command	*A0*	*/RD*	*/WR*	*D7*	*D6*	*D5*	*D4*	*D3*	*D2*	*D1*	*D0*	*Hex*
RDDMADCTR	0	1	0	0	0	0	0	1	0	1	1	**(0Bh)**
Dummy Read	1	0	1	-	-	-	-	-	-	-	-	-
2nd parameter	1	0	1	D7	D6	D5	D4	D3	0	0	0	-

NOTE: "-" Don't care

Description

This command indicates the current status of the display as described in the table below:

Bit	Description	Value
D7	Row Address Order (MY)	"1"=Decrement, "0"=Increment
D6	Column Address Order (MX)	"1"=Decrement, "0"=Increment
D5	Row/Column Order (MV)	"1"= Row/column exchange (MV=1) "0"= Normal (MV=0)
D4	Scan Address Order (ML)	"1"=Decrement, "0"=Increment
D3	RGB/BGR Order (RGB)	"1"=BGR, "0"=RGB
D2	Not Used	"0"
D1	Not Used	"0"
D0	Not Used	"0"

Restriction

Register Availability

Status	Availability
Normal Mode On, Idle Mode Off, Sleep Out	Yes
Normal Mode On, Idle Mode On, Sleep Out	Yes
Partial Mode On, Idle Mode Off, Sleep Out	Yes
Partial Mode On, Idle Mode On, Sleep Out	Yes
Sleep In	Yes

Default

Status	Default Value (D[7:0])
Power On Sequence	00h
S/W Reset	No change
H/W Reset	00h

Flow Chart

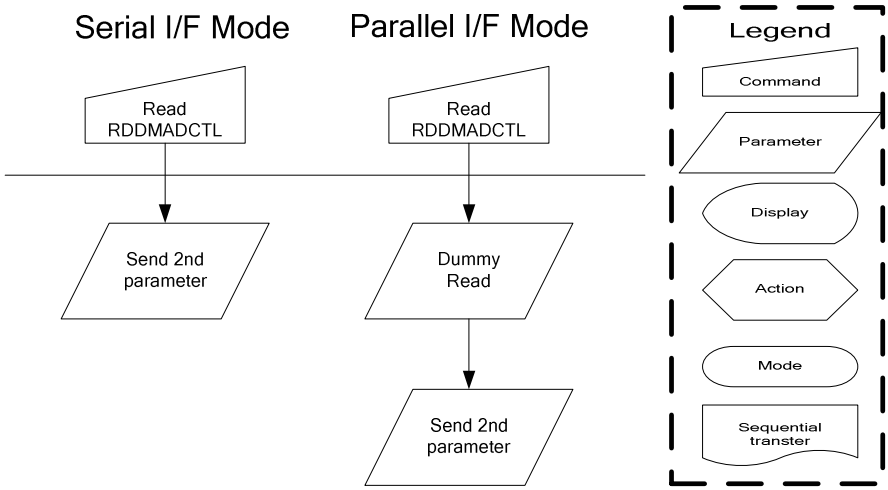

9.1.7. RDDCOLMOD: Read Display Pixel Format (0Ch)

Command	*A0*	*/RD*	*/WR*	*D7*	*D6*	*D5*	*D4*	*D3*	*D2*	*D1*	*D0*	*Hex*
RDDCOLMOD	0	1	0	0	0	0	0	1	1	0	0	**(0Ch)**
Dummy Read	1	0	1	-	-	-	-	-	-	-	-	-
2nd parameter	1	0	1	0	0	0	0	0	D2	D1	D0	-

NOTE: "-" Don't care

Description

This command indicates the current status of the display as described in the table below:

Bit	Description	Value
D7	RGB Interface Color Format	"0" (Not Used)
D6		"0" (Not Used)
D5		"0" (Not Used)
D4		"0" (Not Used)
D3	Control Interface Color Format	"0"
D2		"010"=8 bit/pixel "011"=12 bit/pixel (type A) "100"=12 bit/pixel (type B) "101"=16 bit/pixel "110" = 18-bit/pixel "111" = 24-bit/pixel The others = not defined
D1		
D0		

Restriction

Register Availability

Status	Availability
Normal Mode On, Idle Mode Off, Sleep Out	Yes
Normal Mode On, Idle Mode On, Sleep Out	Yes
Partial Mode On, Idle Mode Off, Sleep Out	Yes
Partial Mode On, Idle Mode On, Sleep Out	Yes
Sleep In	Yes

Default

Status	Default Value (D[7:0])
Power On Sequence	16 bit/pixel
S/W Reset	No change
H/W Reset	16 bit/pixel

Flow Chart	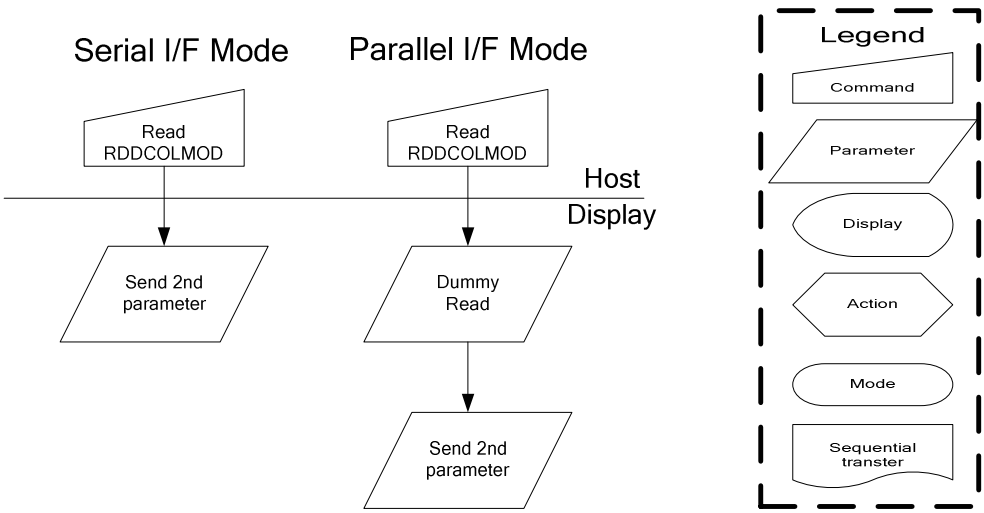

Serial I/F Mode
Parallel I/F Mode
Read RDDCOLMOD
Read RDDCOLMOD
Host
Display
Send 2nd parameter
Dummy Read
Send 2nd parameter
Legend
Command
Parameter
Display
Action
Mode
Sequential transter

9.1.8. RDDIM: Read Display Image Mode (0Dh)

Command	*A0*	*/RD*	*/WR*	*D7*	*D6*	*D5*	*D4*	*D3*	*D2*	*D1*	*D0*	*Hex*
RDDIM	0	1	0	0	0	0	0	1	1	0	1	**(0Dh)**
Dummy Read	1	0	1	-	-	-	-	-	-	-	-	-
2nd parameter	1	0	1	D7	0	D5	D4	D3	0	0	0	-

NOTE: "-" Don't care

Description

This command indicates the current status of the display as described in the table below:

Bit	Description	Value
D7	Vertical Scrolling On/Off	"1" = Vertical scrolling is On, "0" = Vertical scrolling is Off,
D6	Not Used	"0"
D5	Inversion On/Off	"1" = Inversion is On, "0" = Inversion is Off
D4	All Pixels On	"1" = All Pixels On, "0" = Normal Mode
D3	All Pixels Off	"1" = All Pixels Off, "0" = Normal Mode
D2	Not Used	"0"
D1		"0"
D0		"0"

Restriction

Register Availability

Status	Availability
Normal Mode On, Idle Mode Off, Sleep Out	Yes
Normal Mode On, Idle Mode On, Sleep Out	Yes
Partial Mode On, Idle Mode Off, Sleep Out	Yes
Partial Mode On, Idle Mode On, Sleep Out	Yes
Sleep In	Yes

Default

Status	Default Value (D[7:0])
Power On Sequence	00h
S/W Reset	00h
H/W Reset	00h

Flow Chart	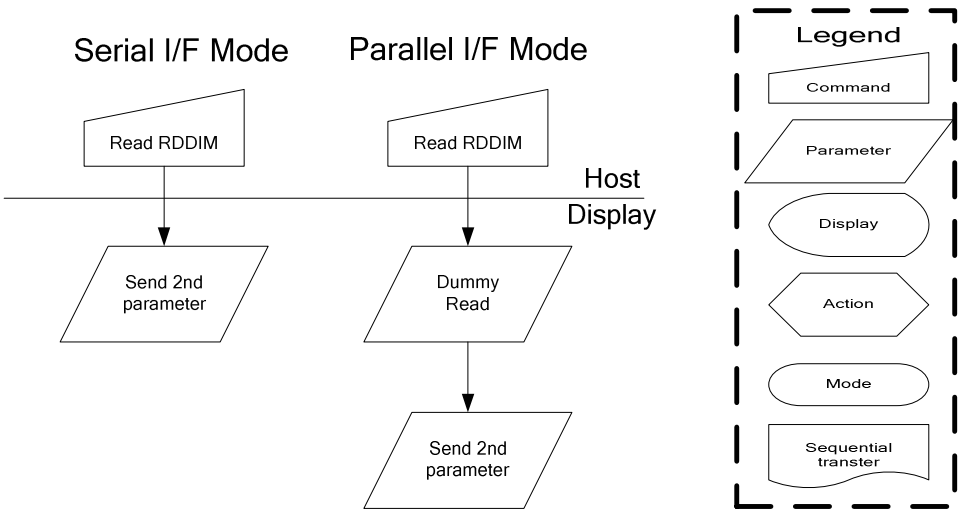

Serial I/F Mode
Parallel I/F Mode
Read RDDIM
Read RDDIM
Host
Display
Send 2nd parameter
Dummy Read
Send 2nd parameter
Legend
Command
Parameter
Display
Action
Mode
Sequential transter

9.1.9. RDDSM: Read Display Signal Mode (0Eh)

Command	*A0*	*/RD*	*/WR*	*D7*	*D6*	*D5*	*D4*	*D3*	*D2*	*D1*	*D0*	*Hex*
RDDSM	0	1	0	0	0	0	0	1	1	1	0	**(0Eh)**
Dummy Read	1	0	1	-	-	-	-	-	-	-	-	-
2nd parameter	1	0	1	D7	D6	0	0	0	0	0	0	-

NOTE: "-" Don't care

Description

This command indicates the current status of the display as described in the table below:

Bit	Description	Value
D7	Tearing Effect Line On/Off	"1" = On, "0" = Off
D6	Tearing effect line mode	"0" = mode1, "1" = mode2
D5	Not Used	"0"
D4	Not Used	"0"
D3	Not Used	"0"
D2	Not Used	"0"
D1	Not Used	"0"
D0	Not Used	"0"

Restriction

Register Availability

Status	Availability
Normal Mode On, Idle Mode Off, Sleep Out	Yes
Normal Mode On, Idle Mode On, Sleep Out	Yes
Partial Mode On, Idle Mode Off, Sleep Out	Yes
Partial Mode On, Idle Mode On, Sleep Out	Yes
Sleep In	Yes

Default

Status	Default Value (D[7:0])
Power On Sequence	00h
S/W Reset	00h
H/W Reset	00h

Flow Chart

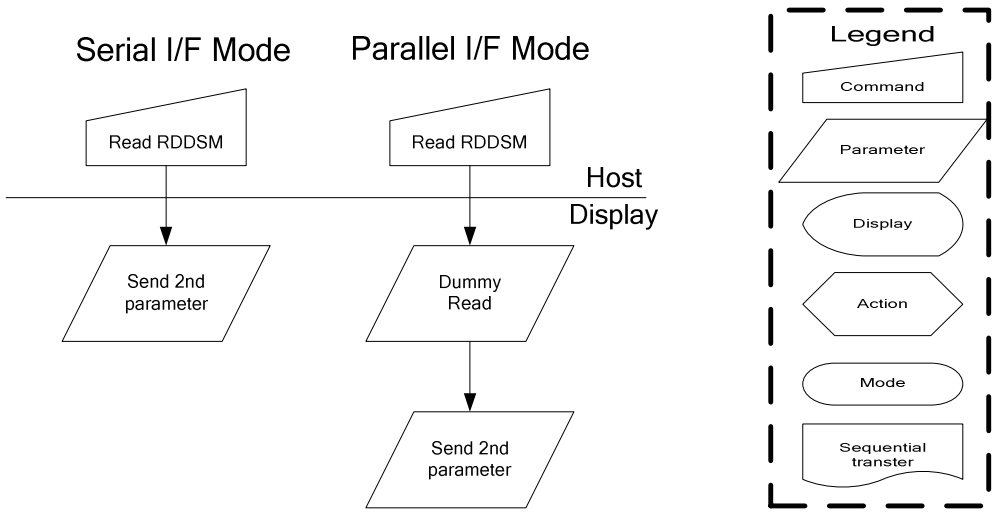

9.1.10. RDDSDR: Read Display Self-Diagnostic Result (0Fh)

Command	*A0*	*/RD*	*/WR*	*D7*	*D6*	*D5*	*D4*	*D3*	*D2*	*D1*	*D0*	*Hex*
RDDSDR	0	1	0	0	0	0	0	1	1	1	1	**(0Fh)**
Dummy Read	1	0	1	-	-	-	-	-	-	-	-	-
2nd parameter	1	0	1	1	1	1	D4	0	0	0	0	

NOTE: "-" Don't care

Description

This command indicates the current status of the display as described in the table below:

Bit	Description	Value
D7	Not Used	"1"
D6	Not Used	"1"
D5	Not Used	"1"
D4	Glass broken Detection	See section7.11.1
D3	Not Used	"0"
D2	Not Used	"0"
D1	Not Used	"0"
D0	Not Used	"0"

Restriction

Register Availability

Status	Availability
Normal Mode On, Idle Mode Off, Sleep Out	Yes
Normal Mode On, Idle Mode On, Sleep Out	Yes
Partial Mode On, Idle Mode Off, Sleep Out	Yes
Partial Mode On, Idle Mode On, Sleep Out	Yes
Sleep In	Yes

Default

Status	Default Value (D[7:0])
Power On Sequence	E0h
S/W Reset	E0h
H/W Reset	E0h

Flow Chart

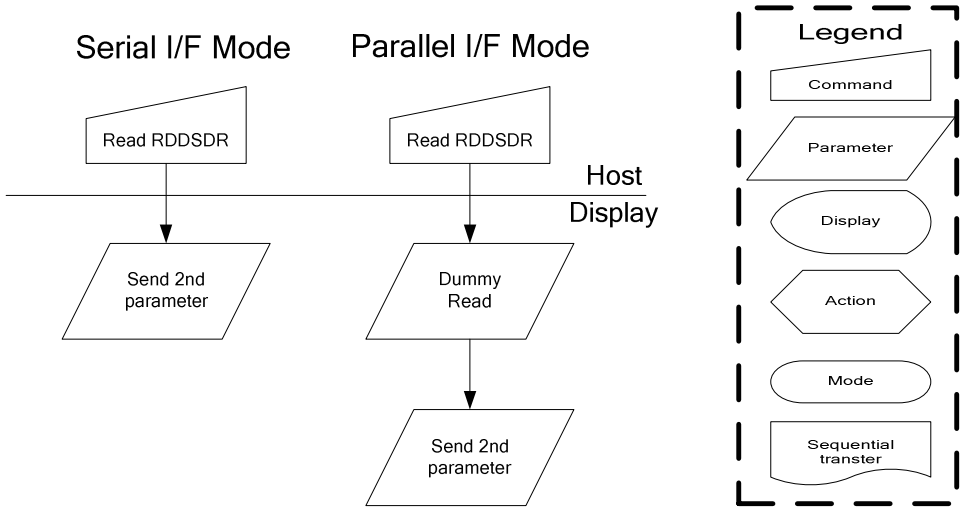

9.1.11. SLPIN: Sleep In (10h)

Command	*A0*	*/RD*	*/WR*	*D7*	*D6*	*D5*	*D4*	*D3*	*D2*	*D1*	*D0*	*Hex*
SLPIN	0	1	0	0	0	0	1	0	0	0	0	**(10h)**
Parameter	No Parameter											

Description

This command causes the LCD module to enter the minimum power consumption mode.

In this mode the DC/DC converter is stopped, Internal display oscillator is stopped, and panel scanning is stopped.

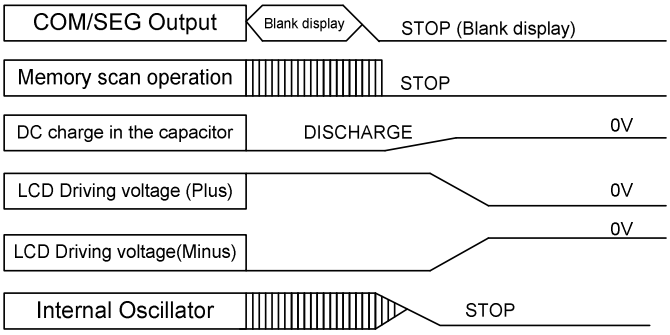

MCU interface and memory are still working and the memory keeps its contents

Restriction

This command has no effect when module is already in sleep in mode. Sleep In Mode can only be exit by the Sleep Out Command (11h).

It will be necessary to wait 5msec before sending next command. This is to allow time for the supply voltages and clock circuits to stabilize.

It will be necessary to wait 120msec after sending Sleep Out command (when in Sleep In Mode) before Sleep In command can be sent.

Register Availability

Status	Availability
Normal Mode On, Idle Mode Off, Sleep Out	Yes
Normal Mode On, Idle Mode On, Sleep Out	Yes
Partial Mode On, Idle Mode Off, Sleep Out	Yes
Partial Mode On, Idle Mode On, Sleep Out	Yes
Sleep In	Yes

Default

Status	Default Value
Power On Sequence	Sleep in mode
S/W Reset	Sleep in mode
H/W Reset	Sleep in mode

Flow Chart	It takes about 120m sec to get into Sleep In mode (booster off state) after SLPIN command issued. The results of booster off can be check by RDDST (09h) command Bit31. 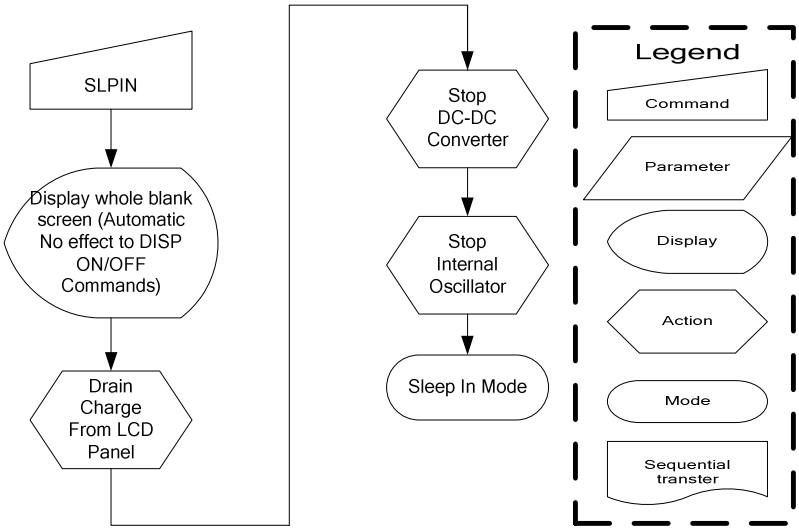

9.1.12. SLPOUT: Sleep Out (11h)

Command	*A0*	*/RD*	*/WR*	*D7*	*D6*	*D5*	*D4*	*D3*	*D2*	*D1*	*D0*	*Hex*
SLPOUT	0	1	0	0	0	0	1	0	0	0	1	**(11h)**
Parameter	No Parameter											

Description

This command turns off sleep mode. In this mode the DC/DC converter is enabled, Internal display oscillator is started, and panel scanning is started.

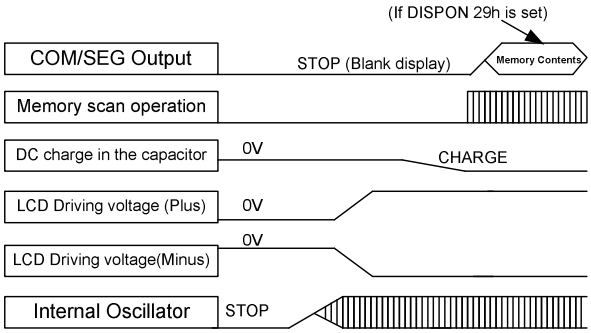

Restriction

This command has no effect when module is already in sleep out mode. Sleep Out Mode can only be exit by the Sleep In Command (10h).

It will be necessary to wait 5msec before sending next command. This is to allow time for the supply voltages and clock circuits to stabilize.

The display module loads all display supplier's factory default values to the registers during this 5msec and there cannot be any abnormal visual effect on the display image if factory default and register values are same when this load is done and when the display module is already Sleep Out –mode.

The display module is doing self-diagnostic functions during this 5msec. It will be necessary to wait 120msec after sending Sleep In command (when in Sleep Out mode) before Sleep Out command can be sent.

Register Availability

Status	Availability
Normal Mode On, Idle Mode Off, Sleep Out	Yes
Normal Mode On, Idle Mode On, Sleep Out	Yes
Partial Mode On, Idle Mode Off, Sleep Out	Yes
Partial Mode On, Idle Mode On, Sleep Out	Yes
Sleep In	Yes

Default

Status	Default Value
Power On Sequence	Sleep in mode
S/W Reset	Sleep in mode
H/W Reset	Sleep in mode

Flow Chart	It takes 120msec to become Sleep Out mode (booster on mode) after SLPOUT command issued. The results of booster on can be check by RDDST (09h) command Bit31. 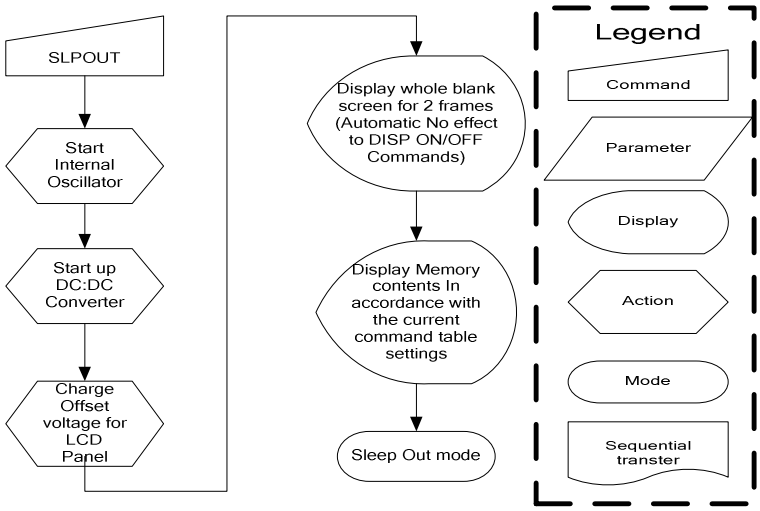

9.1.13. PTLON: Partial Display Mode On (12h)

Command	*A0*	*/RD*	*/WR*	*D7*	*D6*	*D5*	*D4*	*D3*	*D2*	*D1*	*D0*	*Hex*
PTLON	0	1	0	0	0	0	1	0	0	1	0	**(12h)**
Parameter	No Parameter											

Description	This command turns on Partial mode. The partial mode window is described by the Partial Area command (30H) Exit from PTLON by Normal Display Mode On command (13H) There is no abnormal visual effect during mode change between Normal mode On <-> Partial mode On.
Restriction	This command has no effect when Partial mode is active.
Register Availability	

Status	Availability
Normal Mode On, Idle Mode Off, Sleep Out	Yes
Normal Mode On, Idle Mode On, Sleep Out	Yes
Partial Mode On, Idle Mode Off, Sleep Out	Yes
Partial Mode On, Idle Mode On, Sleep Out	Yes
Sleep In	Yes

Default

Status	Default Value
Power On Sequence	Partial mode off
S/W Reset	Partial mode off
H/W Reset	Partial mode off

Flow Chart	See Partial Area (30h)

9.1.14. NORON: Normal Display Mode On (13h)

Command	*A0*	*/RD*	*/WR*	*D7*	*D6*	*D5*	*D4*	*D3*	*D2*	*D1*	*D0*	*Hex*
NORON	0	1	0	0	0	0	1	0	0	1	1	**(13h)**
Parameter	No Parameter											

Description	This command returns the display to normal mode. Normal display mode on means Partial mode off, Scroll mode Off. Exit from NORON by the Partial mode On command (12h) There is no abnormal visual effect during mode change between Normal mode On <-> Partial mode On.
Restriction	This command has no effect when Normal Display mode is active.
Register Availability	

Status	Availability
Normal Mode On, Idle Mode Off, Sleep Out	Yes
Normal Mode On, Idle Mode On, Sleep Out	Yes
Partial Mode On, Idle Mode Off, Sleep Out	Yes
Partial Mode On, Idle Mode On, Sleep Out	Yes
Sleep In	Yes

Default

Status	Default Value
Power On Sequence	Normal Mode On
S/W Reset	Normal Mode On
H/W Reset	Normal Mode On

Flow Chart	See Partial Area and Vertical Scrolling Definition Descriptions for details of when to use this command

9.1.15. INVOFF: Display Inversion Off (20h)

Command	*A0*	*/RD*	*/WR*	*D7*	*D6*	*D5*	*D4*	*D3*	*D2*	*D1*	*D0*	*Hex*
INVOFF	0	1	0	0	0	1	0	0	0	0	0	**(20h)**
Parameter	No Parameter											

Description

This command is used to recover from display inversion mode.

This command makes no change of contents of frame memory.

This command does not change any other status.

(Example)

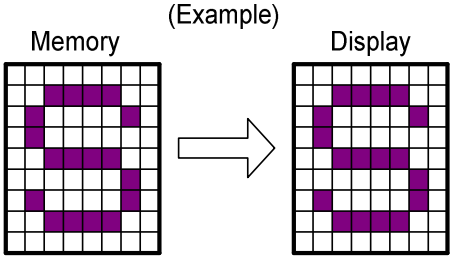

Restriction

This command has no effect when module is already inversion off mode.

Register Availability

Status	Availability
Normal Mode On, Idle Mode Off, Sleep Out	Yes
Normal Mode On, Idle Mode On, Sleep Out	Yes
Partial Mode On, Idle Mode Off, Sleep Out	Yes
Partial Mode On, Idle Mode On, Sleep Out	Yes
Sleep In	Yes

Default

Status	Default Value
Power On Sequence	Display Inversion off
S/W Reset	Display Inversion off
H/W Reset	Display Inversion off

Flow Chart

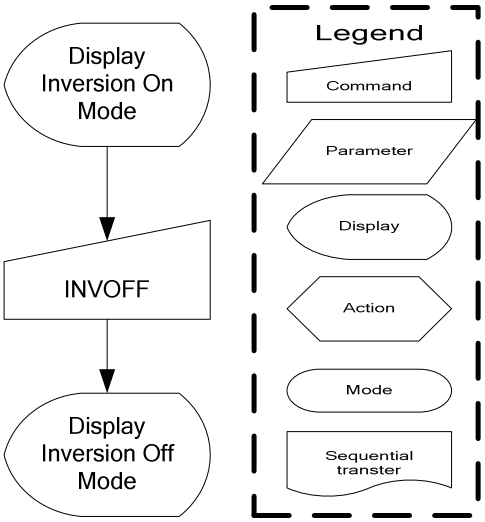

9.1.16. INVON: Display Inversion On (21h)

Command	*A0*	*/RD*	*/WR*	*D7*	*D6*	*D5*	*D4*	*D3*	*D2*	*D1*	*D0*	*Hex*
INVON	0	1	0	0	0	1	0	0	0	0	1	**(21h)**
Parameter	No Parameter											

Description

This command is used to enter into display inversion mode

This command makes no change of contents of frame memory.

This command does not change any other status.

To exit from Display Inversion On, the Display Inversion Off command (20h) should be written.

(Example)

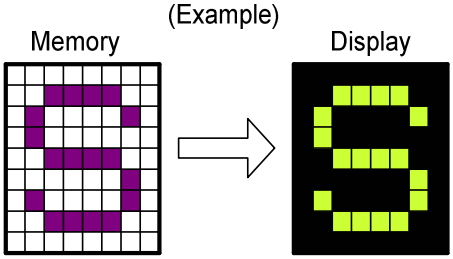

Restriction

This command has no effect when module is already Inversion On mode.

Register Availability

Status	Availability
Normal Mode On, Idle Mode Off, Sleep Out	Yes
Normal Mode On, Idle Mode On, Sleep Out	Yes
Partial Mode On, Idle Mode Off, Sleep Out	Yes
Partial Mode On, Idle Mode On, Sleep Out	Yes
Sleep In	Yes

Default

Status	Default Value
Power On Sequence	Display Inversion off
S/W Reset	Display Inversion off
H/W Reset	Display Inversion off

Flow Chart

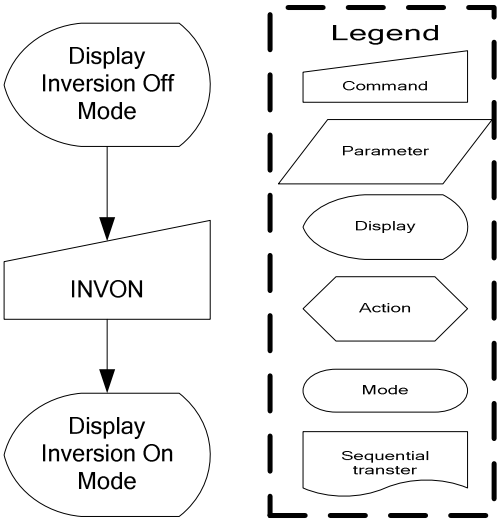

9.1.17. APOFF: All Pixels Off (22h) (Only for Test Purposes)

Command	*A0*	*/RD*	*/WR*	*D7*	*D6*	*D5*	*D4*	*D3*	*D2*	*D1*	*D0*	*Hex*
APOFF	0	1	0	0	0	1	0	0	0	1	0	**(22h)**
Parameter	No Parameter											

Description

This command is only used for test purpose e.g. pixel response time (on/off) measurements on the passive matrix display. Therefore, it is possible that this command is not used for final product software.

All driver outputs become “Low” data state and display becomes black.

This command makes no change of contents of display memory.

This command does not change any other status.

Exit commands are “All Pixels On”, “Normal Display Mode On” and “Partial Display On”.

The display is showing the contents of the frame memory after “Normal Display Mode On” and “Partial Display On” commands.

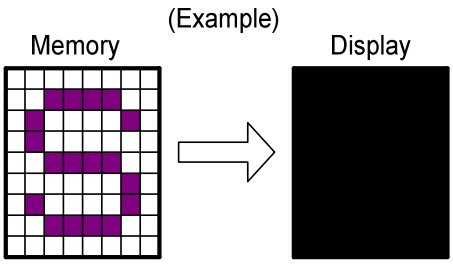

Restriction

This command has no effect when module is already All Pixel Off mode.

Register Availability

Status	Availability
Normal Mode On, Idle Mode Off, Sleep Out	Yes
Normal Mode On, Idle Mode On, Sleep Out	Yes
Partial Mode On, Idle Mode Off, Sleep Out	Yes
Partial Mode On, Idle Mode On, Sleep Out	Yes
Sleep In	Yes

Default

Status	Default Value
Power On Sequence	All pixel off mode disable
S/W Reset	All pixel off mode disable
H/W Reset	All pixel off mode disable

Flow Chart	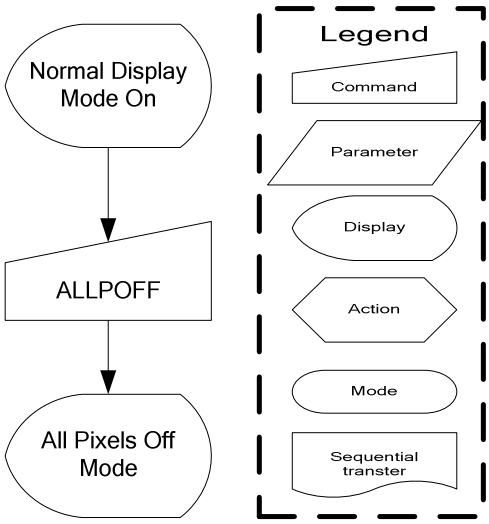 Normal Display Mode On ALLPOFF All Pixels Off Mode Legend Command Parameter Display Action Mode Sequential transter

9.1.18. APON: All Pixels On (23h) (Only for Test Purposes)

Command	*A0*	*/RD*	*/WR*	*D7*	*D6*	*D5*	*D4*	*D3*	*D2*	*D1*	*D0*	*Hex*
APON	0	1	0	0	0	1	0	0	0	1	1	**(23h)**
Parameter	No Parameter											

Description

This command is only used for test purpose e.g. pixel response time (on/off) measurements on the passive matrix display. Therefore, it is possible that this command is not used for final product software.

All driver outputs become “High” data state and display becomes white.

This command makes no change of contents of display memory.

This command does not change any other status.

Exit commands are “All Pixels On”, “Normal Display Mode On” and “Partial Display On”.

The display is showing the contents of the frame memory after “Normal Display Mode On” and “Partial Display On” commands.

(Example)

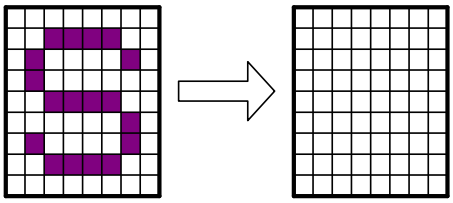

Restriction

This command has no effect when module is already All Pixel On mode.

Register Availability

Status	Availability
Normal Mode On, Idle Mode Off, Sleep Out	Yes
Normal Mode On, Idle Mode On, Sleep Out	Yes
Partial Mode On, Idle Mode Off, Sleep Out	Yes
Partial Mode On, Idle Mode On, Sleep Out	Yes
Sleep In	Yes

Default

Status	Default Value
Power On Sequence	All pixel on mode disable
S/W Reset	All pixel on mode disable
H/W Reset	All pixel on mode disable

Flow Chart	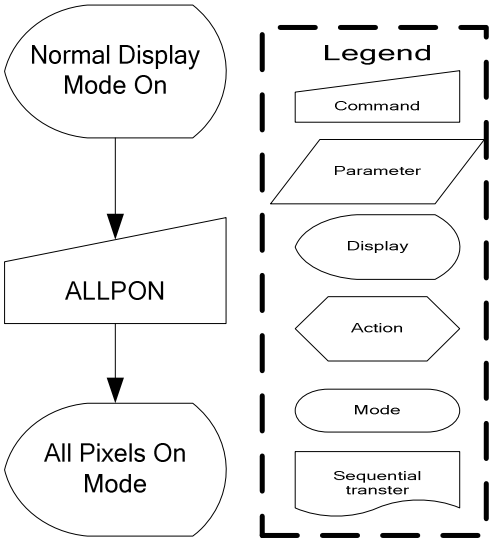 Normal Display Mode On ALLPON All Pixels On Mode Legend Command Parameter Display Action Mode Sequential transter

9.1.19. WRCNTR: Write Contrast (25h)

Command	*A0*	*/RD*	*/WR*	*D7*	*D6*	*D5*	*D4*	*D3*	*D2*	*D1*	*D0*	*Hex*
WRCNTR	0	1	0	0	0	1	0	0	1	0	1	**(25h)**
Parameter	1	1	0	0	EV6	EV5	EV4	EV3	EV2	EV1	EV0	

Description	This command is used to fine tuning the contrast of the display. Parameter range is 00~7Fh. The contrast is not linear but the contrast adjustment is linear. Luminance is increasing from 00h to 7Fh. 00h is presenting dark end and 7Fh is presenting bright end.
Restriction	-

Register Availability

Status	Availability
Normal Mode On, Idle Mode Off, Sleep Out	Yes
Normal Mode On, Idle Mode On, Sleep Out	Yes
Partial Mode On, Idle Mode Off, Sleep Out	Yes
Partial Mode On, Idle Mode On, Sleep Out	Yes
Sleep In	Yes

Default

Status	Default Value
Power On Sequence	3Fh
S/W Reset	3Fh
H/W Reset	3Fh

Flow Chart

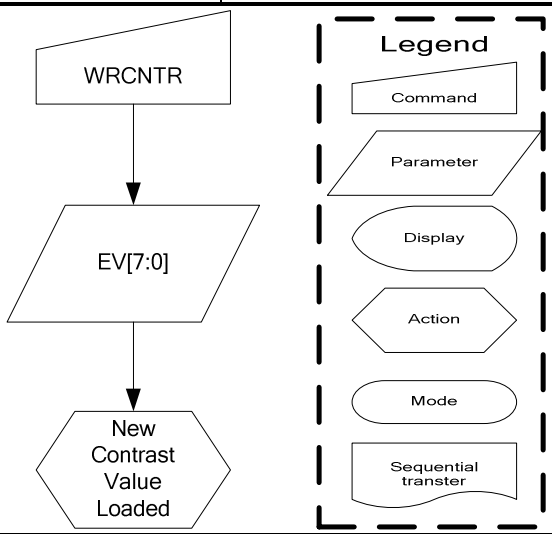

9.1.20. DISPOFF: Display Off (28h)

Command	*A0*	*/RD*	*/WR*	*D7*	*D6*	*D5*	*D4*	*D3*	*D2*	*D1*	*D0*	*Hex*
DISPOFF	0	1	0	0	0	1	0	1	0	0	0	**(28h)**
Parameter	No Parameter											

Description

This command is used to enter into DISPLAY OFF mode. In this mode, the output from Frame Memory disables and blank page inserted.

This command makes no change of contents of frame memory.

This command does not change any other status.

There will be no abnormal visible effect on the display.

Exit from this command by Display On (29h)

(Example)

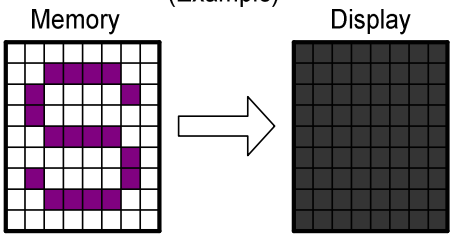

Restriction

This command has no effect when module is already in Display Off mode.

Register Availability

Status	Availability
Normal Mode On, Idle Mode Off, Sleep Out	Yes
Normal Mode On, Idle Mode On, Sleep Out	Yes
Partial Mode On, Idle Mode Off, Sleep Out	Yes
Partial Mode On, Idle Mode On, Sleep Out	Yes
Sleep In	Yes

Default

Status	Default Value
Power On Sequence	Display off
S/W Reset	Display off
H/W Reset	Display off

Flow Chart	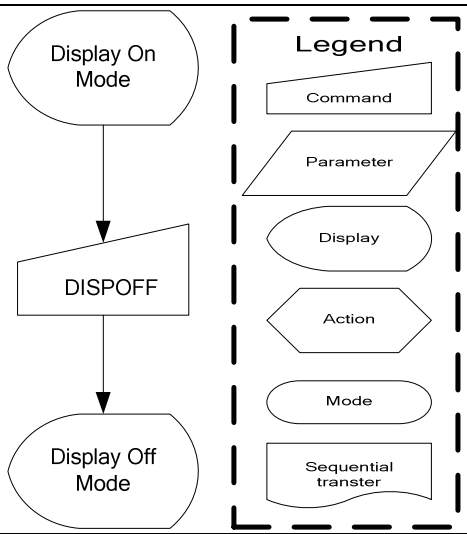 Display On Mode DISPOFF Display Off Mode Legend Command Parameter Display Action Mode Sequential transter

9.1.21. DISPON: Display On (29h)

Command	*A0*	*/RD*	*/WR*	*D7*	*D6*	*D5*	*D4*	*D3*	*D2*	*D1*	*D0*	*Hex*
DISPON	0	1	0	0	0	1	0	1	0	0	1	**(29h)**
Parameter	No Parameter											

Description	Turn on the display screen according to the current display data RAM content and the display timing and setting. This command is used to recover from DISPLAY OFF mode. Output from the Frame Memory is enabled. This command makes no change of contents of frame memory. This command does not change any other status. (Example) Memory Display 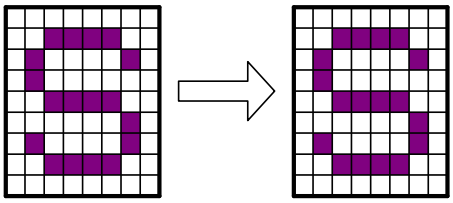
Restriction	This command has no effect when module is already in Display On mode.
Register Availability	

Status	Availability
Normal Mode On, Idle Mode Off, Sleep Out	Yes
Normal Mode On, Idle Mode On, Sleep Out	Yes
Partial Mode On, Idle Mode Off, Sleep Out	Yes
Partial Mode On, Idle Mode On, Sleep Out	Yes
Sleep In	Yes

Default

Status	Default Value
Power On Sequence	Display off
S/W Reset	Display off
H/W Reset	Display off

Flow Chart	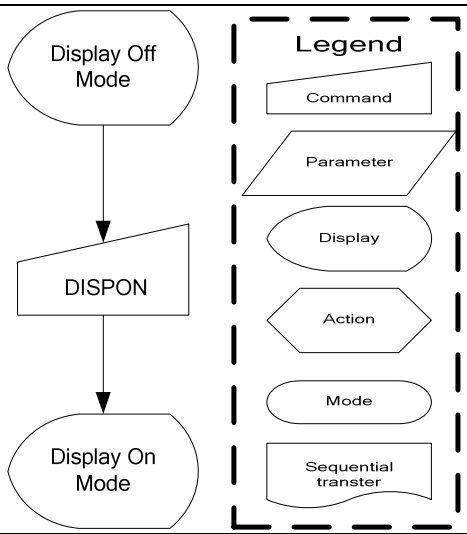 Display Off Mode DISPON Display On Mode Legend Command Parameter Display Action Mode Sequential transter

9.1.22. CASET: Column Address Set (2Ah)

Command	*A0*	*/RD*	*/WR*	*D7*	*D6*	*D5*	*D4*	*D3*	*D2*	*D1*	*D0*	*Hex*
CASET	0	1	0	0	0	1	0	1	0	1	0	**(2Ah)**
1st Parameter	1	1	0	XS7	XS6	XS5	XS4	XS3	XS2	XS1	XS0	
2nd Parameter	1	1	0	XE7	XE6	XE5	XE4	XE3	XE2	XE1	XE0	

NOTE: "-" Don't care

Description

This command is used to define area of frame memory where MCU can access.

This command makes no change on the other driver status.

The value of XS [7:0] and XE [7:0] are referred when RAMWR command comes.

Each value represents one column line in the Frame Memory.

(Example)

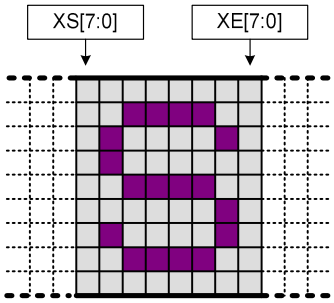

Restriction

XS [7:0] always must be equal to or less than XE [7:0]

When XS [7:0] or XE [7:0] is greater than 83h, data of out of range will be ignored.

Register Availability

Status	Availability
Normal Mode On, Idle Mode Off, Sleep Out	Yes
Normal Mode On, Idle Mode On, Sleep Out	Yes
Partial Mode On, Idle Mode Off, Sleep Out	Yes
Partial Mode On, Idle Mode On, Sleep Out	Yes
Sleep In	Yes

Default

Status	Default Value	
	XS [7:0]	XE [7:0]
Power On Sequence	00h	83h
S/W Reset	00h	83h
H/W Reset	00h	83h

Flow Chart

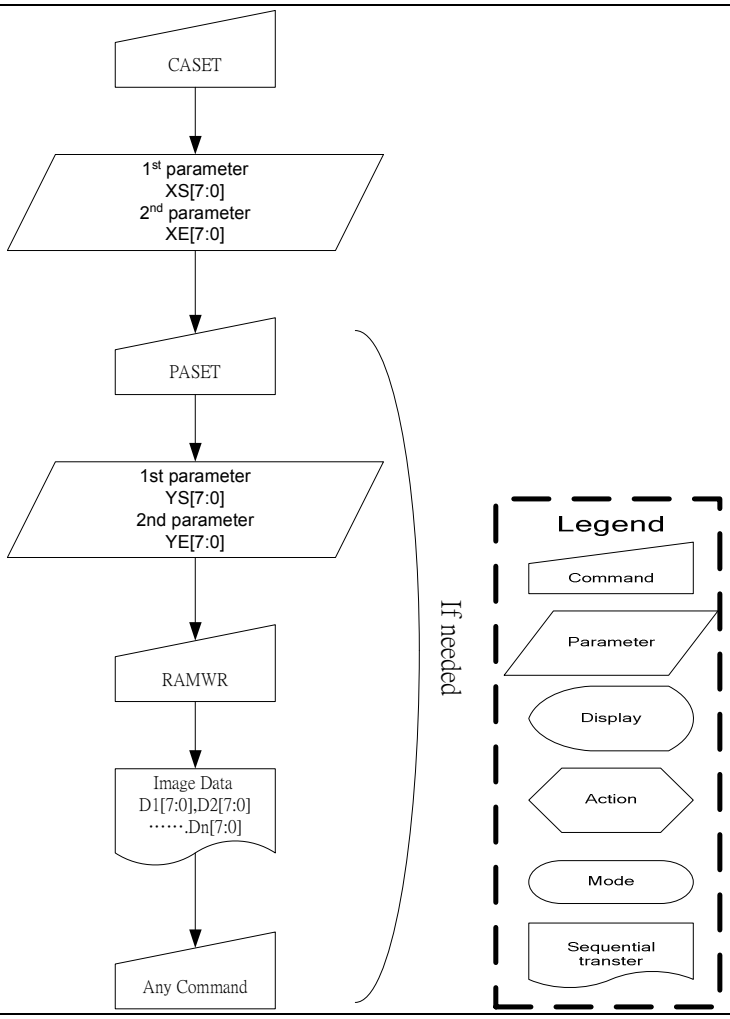
CASET
1st parameter
XS[7:0]
2nd parameter
XE[7:0]
PASET
1st parameter
YS[7:0]
2nd parameter
YE[7:0]
RAMWR
Image Data
D1[7:0],D2[7:0]
……Dn[7:0]
Any Command
If needed
Legend
Command
Parameter
Display
Action
Mode
Sequential transter

9.1.23. RASET: Row Address Set (2Bh)

Command	*A0*	*/RD*	*/WR*	*D7*	*D6*	*D5*	*D4*	*D3*	*D2*	*D1*	*D0*	*Hex*
RASET	0	1	0	0	0	1	0	1	0	1	1	**(2Bh)**
1st Parameter	1	1	0	YS7	YS6	YS5	YS4	YS3	YS2	YS1	YS0	
2nd Parameter	1	1	0	YE7	YE6	YE5	YE4	YE3	YE2	YE1	YE0	

NOTE: "-" Don't care

Description

This command is used to define area of frame memory where MCU can access.

This command makes no change on the other driver status.

The value of YS [7:0] and YE [7:0] are referred when RAMWR command comes.

Each value represents one column line in the Frame Memory.

(Example)

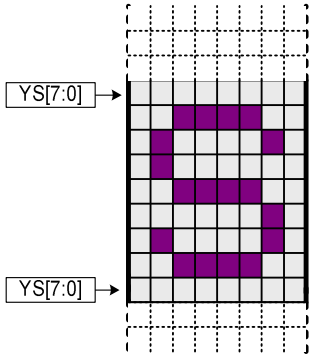

Restriction

YS [7:0] always must be equal to or less than YE [7:0]

When YS [7:0] or YE [7:0] is greater than 83h, data of out of range will be ignored.

Register Availability

Status	Availability
Normal Mode On, Idle Mode Off, Sleep Out	Yes
Normal Mode On, Idle Mode On, Sleep Out	Yes
Partial Mode On, Idle Mode Off, Sleep Out	Yes
Partial Mode On, Idle Mode On, Sleep Out	Yes
Sleep In	Yes

Default

Status	Default Value	
	XS [7:0]	XE [7:0]
Power On Sequence	00h	83h
S/W Reset	00h	83h
H/W Reset	00h	83h

Flow Chart

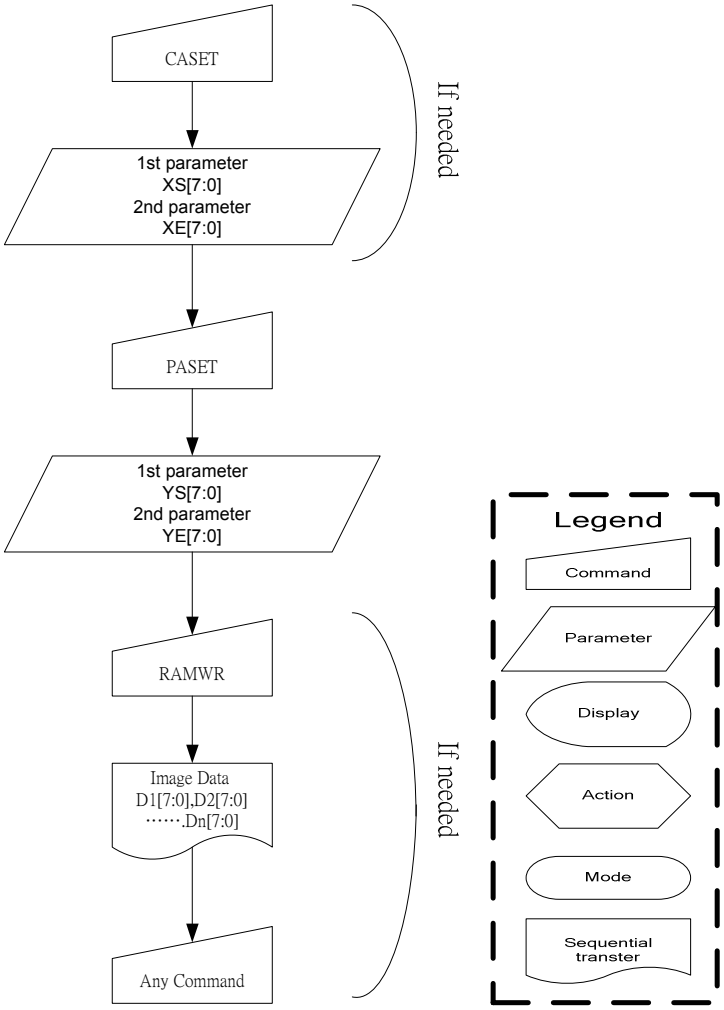
CASET
1st parameter
XS[7:0]
2nd parameter
XE[7:0]
If needed
PASET
1st parameter
YS[7:0]
2nd parameter
YE[7:0]
RAMWR
Image Data
D1[7:0],D2[7:0]
……Dn[7:0]
Any Command
If needed
Legend
Command
Parameter
Display
Action
Mode
Sequential
transter

9.1.24. RAMWR: Memory Write (2Ch)

Command	*A0*	*/RD*	*/WR*	*D7*	*D6*	*D5*	*D4*	*D3*	*D2*	*D1*	*D0*	*Hex*
RAMWR	0	1	0	0	0	1	0	1	1	0	0	**(2Ch)**
Write D1[7:0]	1	1	0	D7	D6	D5	D4	D3	D2	D1	D0	-
:	1	1	0	:	:	:	:	:	:	:	:	-
Write Dn[7:0]	1	1	0	D7	D6	D5	D4	D3	D2	D1	D0	-

Description

This command is used to transfer data MCU to frame memory.

This command makes no change to the other driver status.

When this command is accepted, the column register and the row register are reset to the Start Column/Start Row positions.

The Start Column/Start Row positions are different in accordance with MADCTR setting. Then D [7:0] is stored in frame memory and the column register and the row register incremented.

Frame Write can be canceled by sending any other command.

Restriction

In all color modes, there is no restriction on length of parameters.

Register Availability

Status	Availability
Normal Mode On, Idle Mode Off, Sleep Out	Yes
Normal Mode On, Idle Mode On, Sleep Out	Yes
Partial Mode On, Idle Mode Off, Sleep Out	Yes
Partial Mode On, Idle Mode On, Sleep Out	Yes
Sleep In	Yes

Default

Status	Default Value
Power On Sequence	Contents of memory is set randomly
S/W Reset	Contents of memory is remained
H/W Reset	Contents of memory is remained

Flow Chart

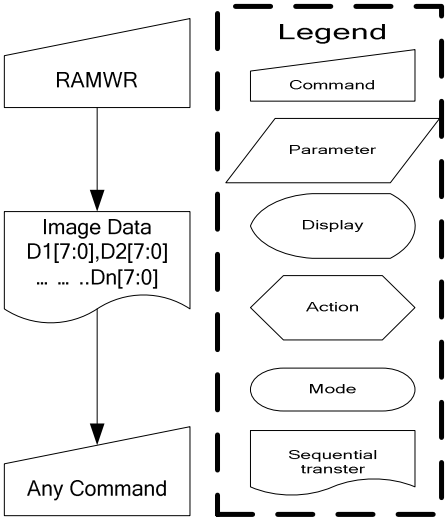

9.1.25. RGBSET: Colour Set for 256 or 4k-Color Display (2Dh)

Command	*A0*	*/RD*	*/WR*	*D7*	*D6*	*D5*	*D4*	*D3*	*D2*	*D1*	*D0*	*Hex*
RGBSET	0	1	0	0	0	1	0	1	1	0	1	**(2Dh)**
1st parameter	1	1	0	-	-	-	R004	R003	R002	R001	R000	-
:	1	1	0	:	:	:	Rnn4	Rnn3	Rnn2	Rnn1	Rnn0	-
16th parameter	1	1	0	-	-	-	R154	R153	R152	R151	R150	-
17th parameter	1	1	0	-	-	G005	G004	G003	G002	G001	G000	-
:	1	1	0	:	:	Gnn5	Gnn4	Gnn3	Gnn2	Gnn1	Gnn0	
32nd parameter	1	1	0	-	-	G155	G154	G153	G152	G151	G150	
33rd parameter	1	1	0	-	-	-	B004	B003	B002	B001	B000	
:	1	1	0	:	:	:	Bnn4	Bnn3	Bnn2	Bnn1	Bnn0	
48th parameter	1	1	0	-	-	-	B154	B153	B152	B151	B150	

NOTE: "-" Don't care

Description	This command is used to define the LUT for 8bit-to-16bit or 12bit-to-16bit color depth conversations. (See also Section 7.9。) 48 Bytes must be written to the LUT regardless of the color mode. Only the values in Section 7.9。 are referred. This command has no effect on other commands/parameters and Contents of frame memory. Visible change takes effect next time the Frame Memory is written to.
Restriction	Do not send any command before the last data is sent or LUT is not defined correctly.
Register Availability	

Status	Availability
Normal Mode On, Idle Mode Off, Sleep Out	Yes
Normal Mode On, Idle Mode On, Sleep Out	Yes
Partial Mode On, Idle Mode Off, Sleep Out	Yes
Partial Mode On, Idle Mode On, Sleep Out	Yes
Sleep In	Yes

Default

Status	Default Value
Power On Sequence	Refer to Section 7.9。
S/W Reset	Contents of the look-up table protected
H/W Reset	Refer to Section7.9。

Flow Chart	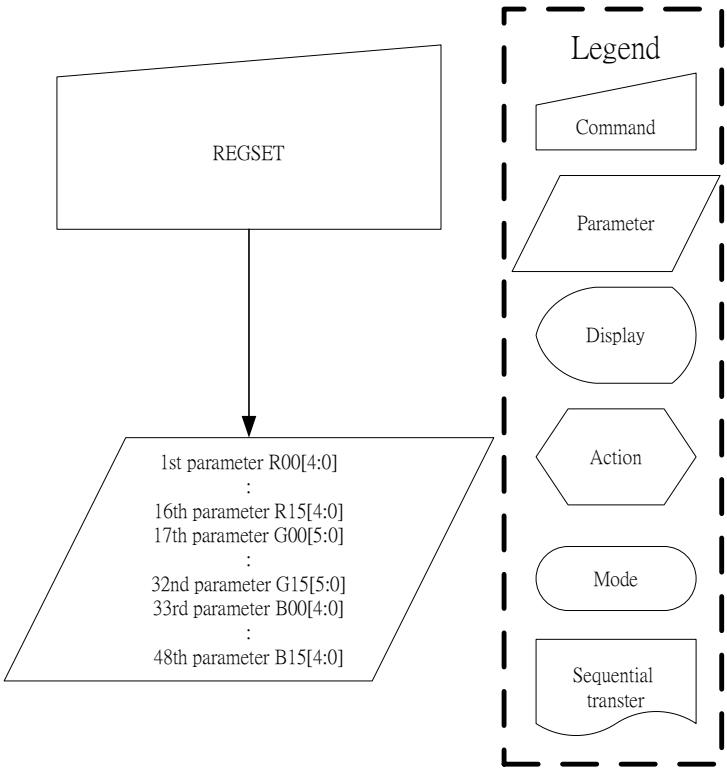

REGSET
1st parameter R00[4:0]
:
16th parameter R15[4:0]
17th parameter G00[5:0]
:
32nd parameter G15[5:0]
33rd parameter B00[4:0]
:
48th parameter B15[4:0]
Legend
Command
Parameter
Display
Action
Mode
Sequential transter

9.1.26. RAMRO : Memory Read (2EH)

	A0	RD	WR	D7	D6	D5	D4	D3	D2	D1	D0	HEX
Command	0	1	↑	0	0	1	0	1	1	1	0	**(2Eh)**
1st parameter	1	↑	1	x	x	x	x	x	x	x	x	x
2nd parameter	1	↑	1	D17	D16	D15	D14	D13	D12	D11	D10	00H ~ FFH
…	1	↑	1	Dx7	Dx6	Dx5	Dx4	Dx3	Dx2	Dx1	Dx0	00H ~ FFH
(N+1)th parameter	1	↑	1	Dn7	Dn6	Dn5	Dn4	Dn3	Dn2	Dn1	Dn0	00H ~ FFH

Description

This command is used to transfer data from frame memory to MCU. When this command is accepted, the column register and the page register are reset to the Start Column/Start Page positions. The Start Column/Start Page positions are different in accordance with MADCTR setting. Then D[7:0] is read back from the frame memory and the column register and the page register incremented. Frame Read can be stopped by sending any other command.

Restriction

In all color modes, the Frame Read is always 16bit so there is no restriction on length of parameters.

Note: Memory Read is only possible via the Parallel Interface.

Register Availability

Status	Availability
Normal Mode On, Idle Mode Off, Sleep Out	Yes
Normal Mode On, Idle Mode On, Sleep Out	Yes
Partial Mode On, Idle Mode Off, Sleep Out	Yes
Partial Mode On, Idle Mode On, Sleep Out	Yes
Sleep In or Booster Off	Yes

Default

Status	Default Value
Power On Sequence	Contents of memory is set randomly
S/W Reset	Contents of memory is not cleared
H/W Reset	Contents of memory is not cleared

Flow Chart	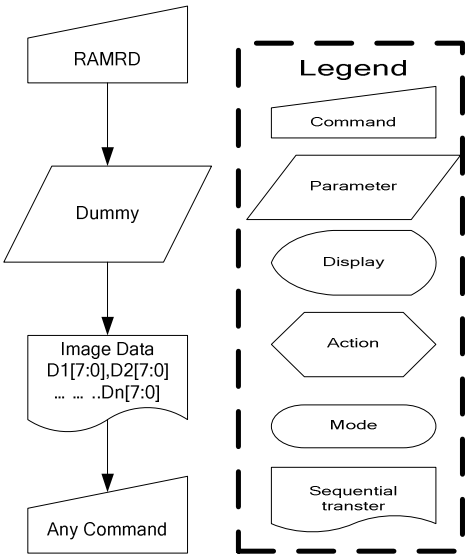 RAMRD Dummy Image Data D1[7:0],D2[7:0] … … ..Dn[7:0] Any Command Legend Command Parameter Display Action Mode Sequential transter

9.1.27. PTLAR: Partial Area (30h)

Command	*A0*	*/RD*	*/WR*	*D7*	*D6*	*D5*	*D4*	*D3*	*D2*	*D1*	*D0*	*Hex*
PTLAR	0	1	0	0	0	1	1	0	0	0	0	**(30h)**
1st Parameter	1	1	0	PS7	PS6	PS5	PS4	PS3	PS2	PS1	PS0	-
2nd Parameter	1	1	0	PE7	PE6	PE5	PE4	PE3	PE2	PE1	PE0	-

NOTE: "-" Don't care

Description

This command defines the partial mode's display area. There are 2 parameters associated with this command, the first defines the Start Line (PS) and the second the End Line (PE), as illustrated in the figures below. PS and PE refer to the Frame Memory Line counter.

If End Line > Start Line when MADCTR ML=0:

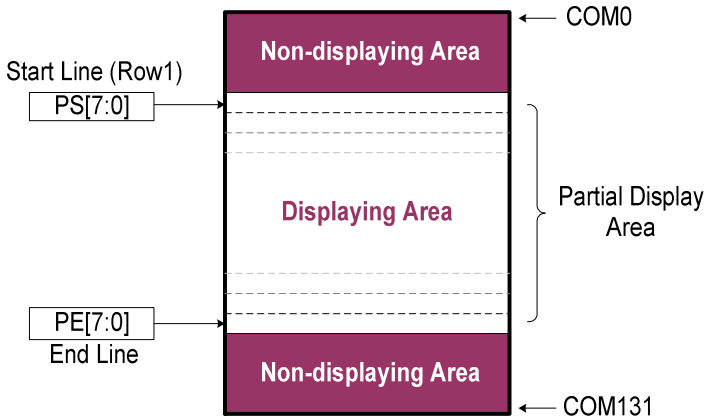

If End Line > Start Line when MADCTR ML=1:

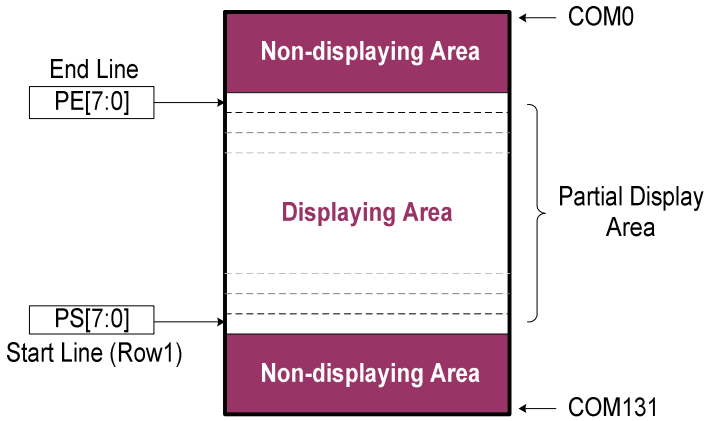

If End Line < Start Line when MADCTR ML=0:

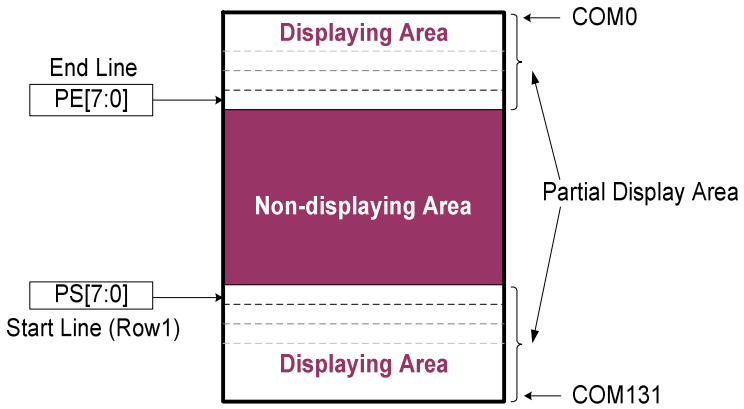

* Row1: Frame memory row address 1.

If End Line = Start Line then the Partial Area will be one line deep.

Restriction

PS[7:0] and PE[7:0] are based on line unit.

PS[6:0]=00h, 01h, 02h, 03h, … , 83h

PE[6:0]= 00h, 01h, 02h, 03h, … , 83h

Register Availability

Status	Availability
Normal Mode On, Idle Mode Off, Sleep Out	Yes
Normal Mode On, Idle Mode On, Sleep Out	Yes
Partial Mode On, Idle Mode Off, Sleep Out	Yes
Partial Mode On, Idle Mode On, Sleep Out	Yes
Sleep In	Yes

Default

Status	Default Value	
	PS[6:0]	PE[6:0]
Power On Sequence	00h	83h
S/W Reset	00h	83h
H/W Reset	00h	83h

Flow Chart

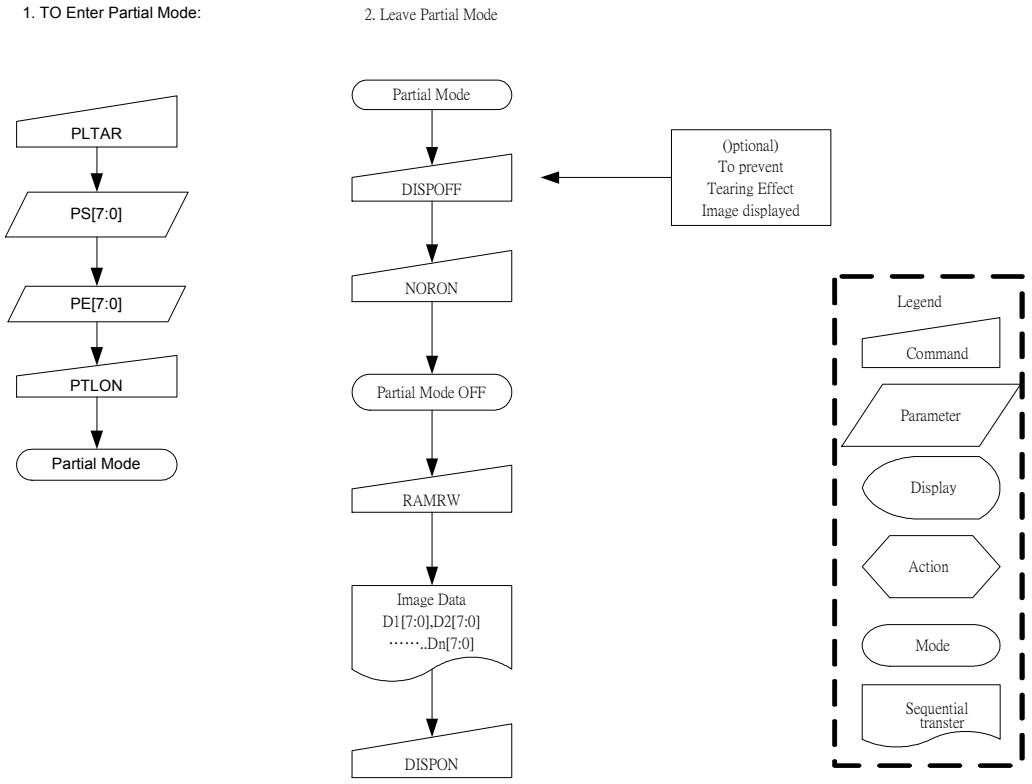
1. TO Enter Partial Mode:
PLTAR
PS[7:0]
PE[7:0]
PTLON
Partial Mode
2. Leave Partial Mode
Partial Mode
DISPOFF
NORON
Partial Mode OFF
RAMRW
Image Data
D1[7:0],D2[7:0]
……..Dn[7:0]
DISPON
(Optional)
To prevent
Tearing Effect
Image displayed
Legend
Command
Parameter
Display
Action
Mode
Sequential
transter

9.1.28. SCRLAR: Scroll Area (33h)

Command	*A0*	*/RD*	*/WR*	*D7*	*D6*	*D5*	*D4*	*D3*	*D2*	*D1*	*D0*	*Hex*
SCRLAR	0	1	0	0	0	1	1	0	0	1	1	**(33h)**
1st parameter	1	1	0	TFA7	TFA6	TFA5	TFA4	TFA3	TFA2	TFA1	TFA0	-
2nd parameter	1	1	0	VSA7	VSA6	VSA5	VSA4	VSA3	VSA2	VSA1	VSA0	-
3rd parameter	1	1	0	BFA7	BFA6	BFA5	BFA4	BFA3	BFA2	BFA1	BFA0	-

NOTE: "-" Don't care

<table>
<tr><td>Description</td><td>This command just defines the Vertical Scrolling Area of the display and not performs vertical scroll.
When MADCTR ML=0
The 1st parameter TFA [7:0] describes the Top Fixed Area (in No. of lines from Top of the Frame Memory and Display).
The 2nd parameter VSA [7:0] describes the height of the Vertical Scrolling Area (in No. of lines of the Frame Memory [not the display] from the Vertical Scrolling Start Address) The first line appears immediately after the bottom most line of the Top Fixed Area.
The 3rd parameter BFA [7:0] describes the Bottom Fixed Area (in No. of lines from Bottom of the Frame Memory and Display).
TFA, VSA and BFA refer to the Frame Memory Line Pointer.
 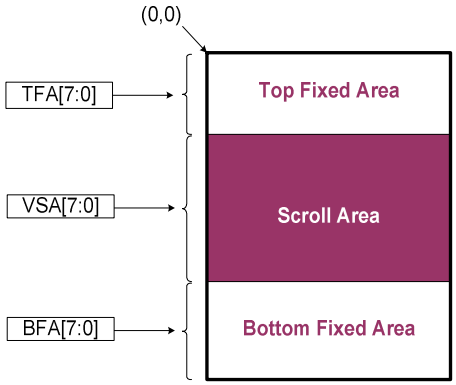
</td></tr>
<tr><td>Restriction</td><td>The condition is (TFA+VSA+BFA) = 132, otherwise Scrolling mode is undefined.</td></tr>
<tr><td>Register Availability</td><td><table>
<tr><td>Status</td><td>Availability</td></tr>
<tr><td>Normal Mode On, Idle Mode Off, Sleep Out</td><td>Yes</td></tr>
<tr><td>Normal Mode On, Idle Mode On, Sleep Out</td><td>Yes</td></tr>
<tr><td>Partial Mode On, Idle Mode Off, Sleep Out</td><td>Yes</td></tr>
<tr><td>Partial Mode On, Idle Mode On, Sleep Out</td><td>Yes</td></tr>
<tr><td>Sleep In</td><td>Yes</td></tr>
</table></td></tr>
</table>

Default

Status	Default Value		
	TFA [7:0]	VSA [7:0]	BFA [7:0]
Power On Sequence	00h	84h	00h
S/W Reset	00h	84h	00h
H/W Reset	00h	84h	00h

Flow Chart

1. TO Enter Vertical Scroll Mode:

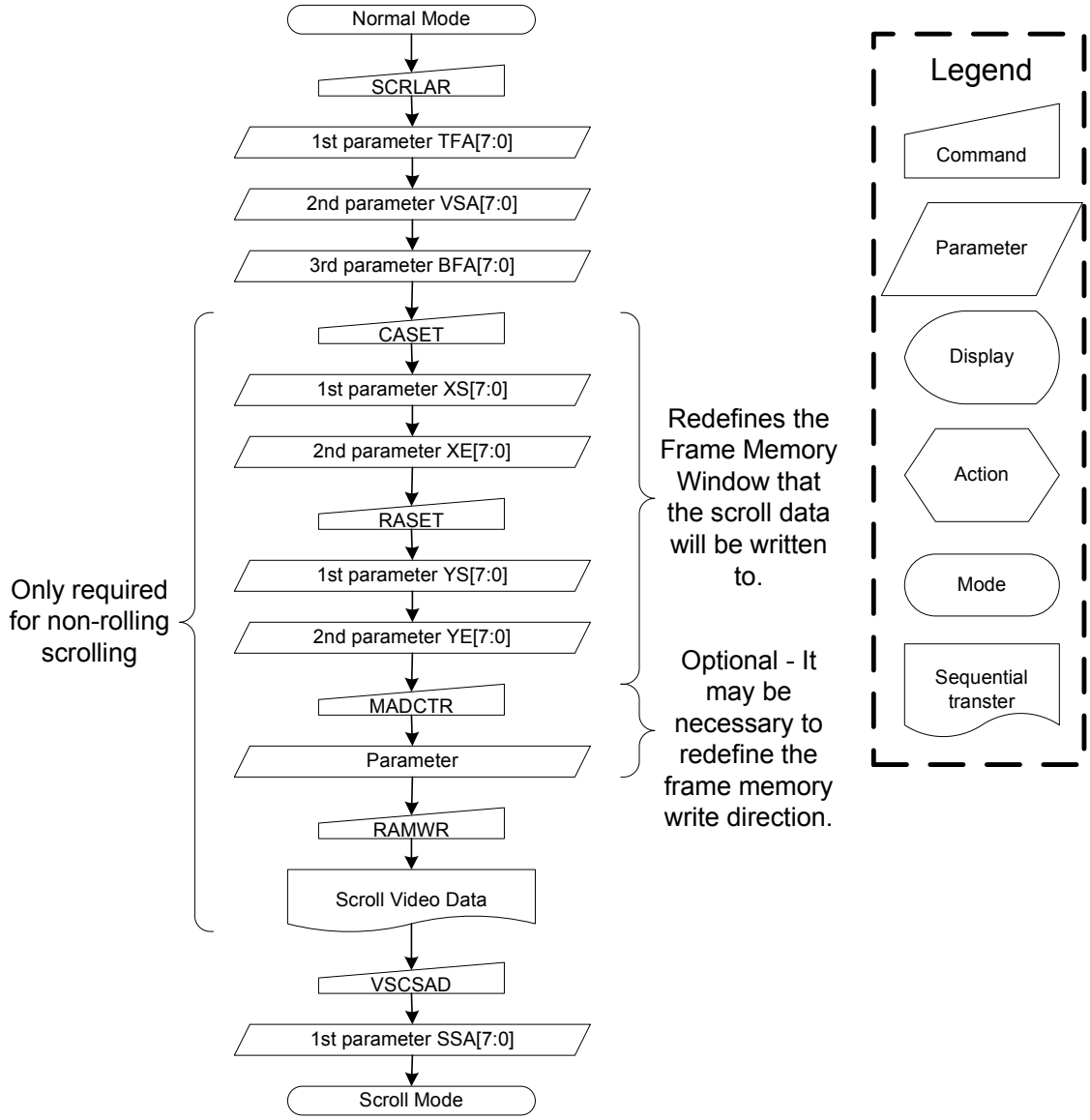

NOTE: The Frame Memory Window size must be defined correctly otherwise undesirable image will be displayed.

Flow Chart

2. Continuous Scroll:

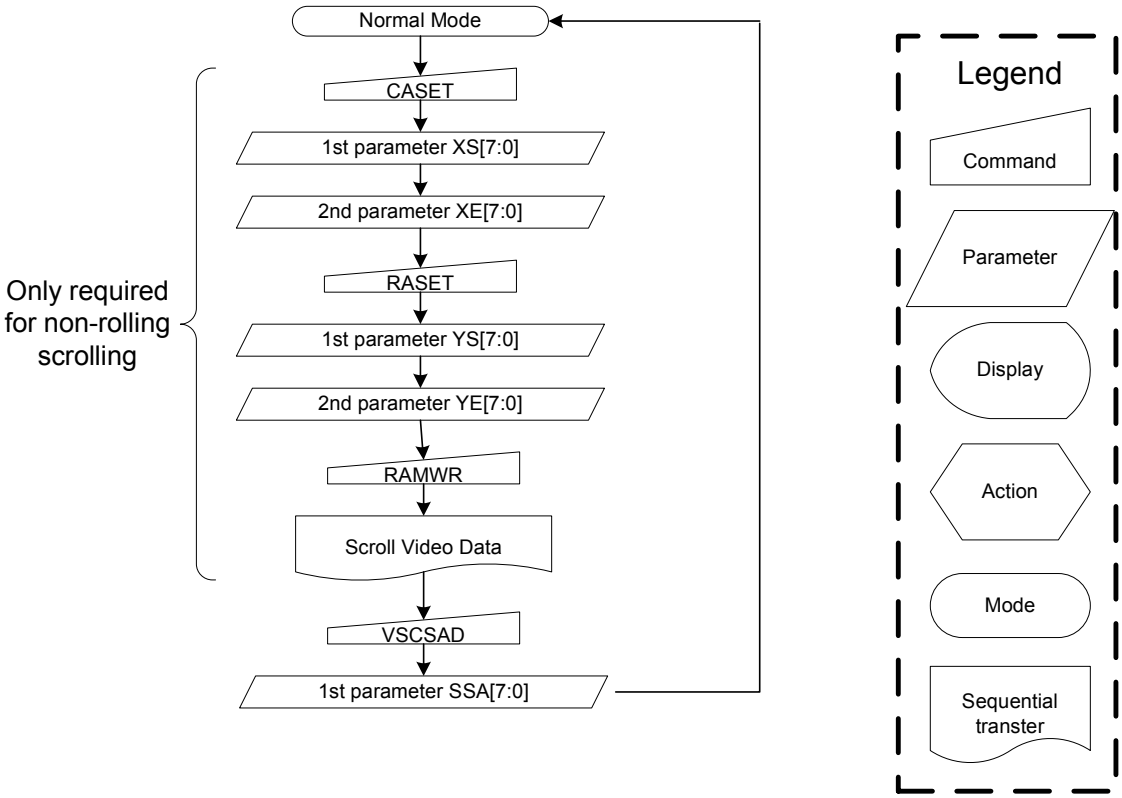

3. To Exit Vertical Scroll Mode:

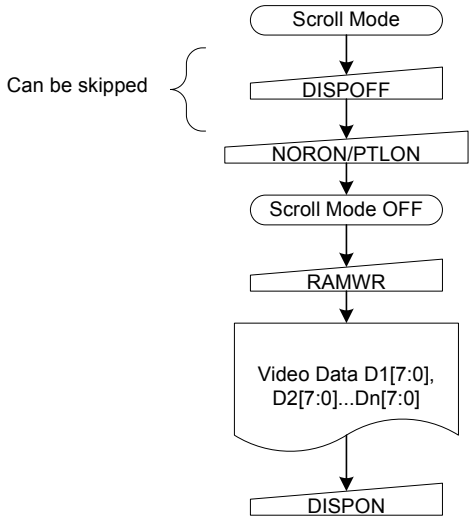

NOTE: Scroll Mode can be exit by both the Normal Display Mode On(13h) and Partial Mode On (12h) commands.

9.1.29. TEOFF: Tearing Effect Line OFF (34h)

Command	*A0*	*/RD*	*/WR*	*D7*	*D6*	*D5*	*D4*	*D3*	*D2*	*D1*	*D0*	*Hex*
TEOFF	0	1	0	0	0	1	1	0	1	0	0	**(34h)**
Parameter	No Parameter											

Description	This command is used to turn OFF (Active Low) the Tearing Effect output signal from the TE signal line.
Restriction	This command has no effect when Tearing Effect output is already OFF.

Register Availability

Status	Availability
Normal Mode On, Idle Mode Off, Sleep Out	Yes
Normal Mode On, Idle Mode On, Sleep Out	Yes
Partial Mode On, Idle Mode Off, Sleep Out	Yes
Partial Mode On, Idle Mode On, Sleep Out	Yes
Sleep In	Yes

Default

Status	Default Value
Power On Sequence	Tearing effect off
S/W Reset	Tearing effect off
H/W Reset	Tearing effect off

Flow Chart

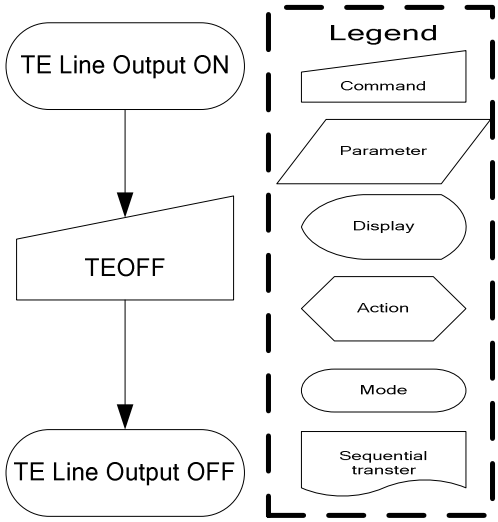

9.1.30. TEON: Tearing Effect Line ON (35h)

Command	*A0*	*/RD*	*/WR*	*D7*	*D6*	*D5*	*D4*	*D3*	*D2*	*D1*	*D0*	*Hex*
TEON	0	1	0	0	0	1	1	0	1	0	1	**(35h)**
Parameter	1	1	0	-	-	-	-	-	-	-	M	

NOTE: "-" Don't care

Description

This command is used to turn ON the Tearing Effect output signal from the TE signal line. This output is not affected by changing MADCTR bit ML.

The Tearing Effect Line On has one parameter, which describes the mode of the Tearing Effect Output Line. ("-"=Don't Care).

When M=0:

The Tearing Effect Output Line consists of V-Blanking information only:

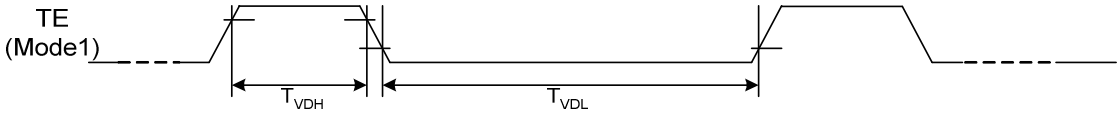

When M=1:

The Tearing Effect Output Line consists of both V-Blanking and H-Blanking information:

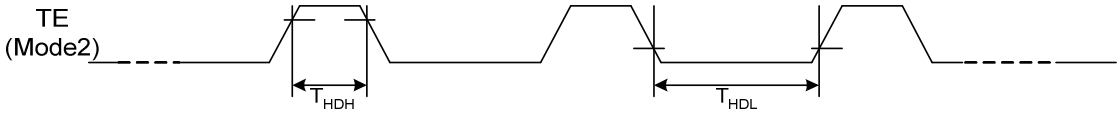

See section 7.4.8 for more information.

Note: During Sleep In Mode with Tearing Effect Line On, Tearing Effect Output pin will be active Low.

Restriction

This command has no effect when Tearing Effect output is already OFF.

Register Availability

Status	Availability
Normal Mode On, Idle Mode Off, Sleep Out	Yes
Normal Mode On, Idle Mode On, Sleep Out	Yes
Partial Mode On, Idle Mode Off, Sleep Out	Yes
Partial Mode On, Idle Mode On, Sleep Out	Yes
Sleep In	Yes

Default

Status	Default Value
Power On Sequence	Tearing effect off & M=0
S/W Reset	Tearing effect off & M=0
H/W Reset	Tearing effect off & M=0

Flow Chart	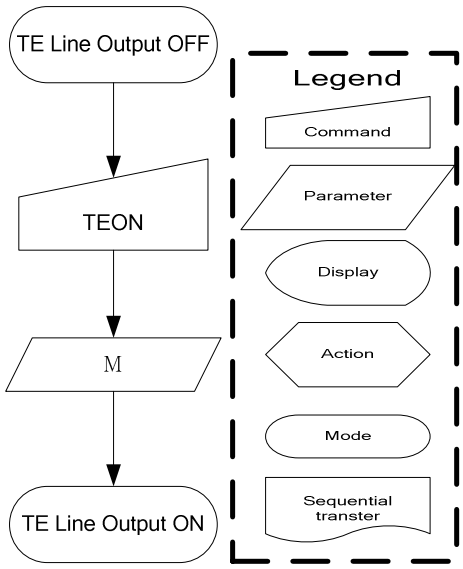

TE Line Output OFF
TEON
M
TE Line Output ON
Legend
Command
Parameter
Display
Action
Mode
Sequential transter

9.1.31. MADCTR: Memory Data Access Control (36h)

Command	*A0*	*/RD*	*/WR*	*D7*	*D6*	*D5*	*D4*	*D3*	*D2*	*D1*	*D0*	*Hex*
MADCTR	0	1	0	0	0	1	1	0	1	1	0	**(36h)**
Parameter	1	1	0	MY	MX	MV	ML	RGB	-	-	-	-

NOTE: "-" Don't care

Description

This command defines read/write scanning direction of frame memory.

This command makes no change on the other driver status.

Note: ML affects to Partial Area (30h), Vertical Scrolling Definition (33h), Vertical Scrolling Start address (37h), Partial On (12h) commands

Bit Assignment

Bit	NAME	DESCRIPTION
MY	ROW ADDRESS ORDER	These 3bits controls MCU to memory write/read direction.
MX	COLUMN ADDRESS ORDER	
MV	ROW/COLUMN ORDER	
ML	LINE ADDRESS ORDER	LCD refresh direction control
RGB	RGB-BGR ORDER	Color selector switch control 0=RGB color filter panel, 1=BGR color filter panel) The contents of the frame memory are not changed.

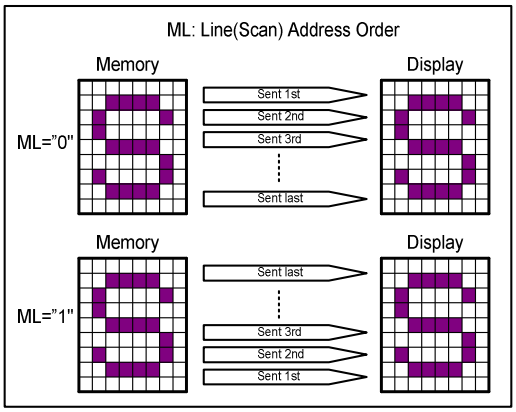

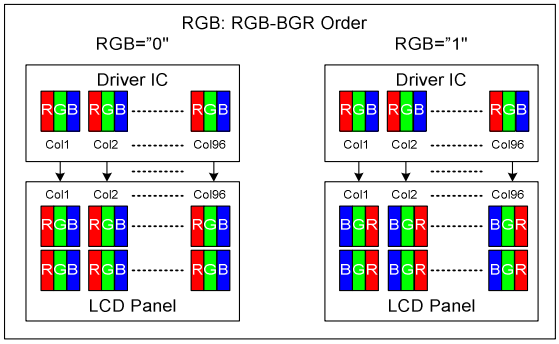

Restriction

D2, D1 and D0 of the 1st parameter are set to '000'internally.

Register Availability

Status	Availability
Normal Mode On, Idle Mode Off, Sleep Out	Yes

	Normal Mode On, Idle Mode On, Sleep Out	Yes
	Partial Mode On, Idle Mode Off, Sleep Out	Yes
	Partial Mode On, Idle Mode On, Sleep Out	Yes
	Sleep In	Yes

Default	Status	Default Value
	Power On Sequence	MY=0,MX=0,MV=0,ML=0,RGB=0
	S/W Reset	Not changed
	H/W Reset	MY=0,MX=0,MV=0,ML=0,RGB=0

Flow Chart

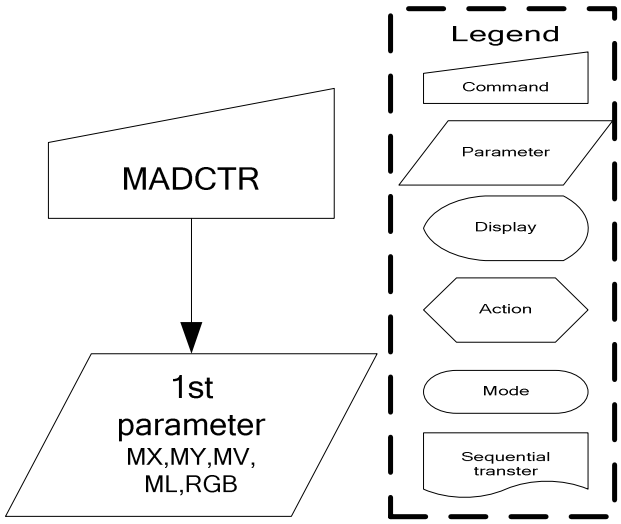

9.1.32. VSCSAD: Vertical Scroll Start Address of RAM (37h)

Command	*A0*	*/RD*	*/WR*	*D7*	*D6*	*D5*	*D4*	*D3*	*D2*	*D1*	*D0*	*Hex*
VSCSAD	0	1	0	0	0	1	1	0	1	1	1	**(37h)**
Parameter	1	1	0	SSA7	SSA6	SSA5	SSA4	SSA3	SSA2	SSA1	SSA0	

Description

This command is used together with Vertical Scrolling Definition (33h). These two commands describe the scrolling area and the scrolling mode.

The Vertical Scrolling Start Address command has one parameter which describes which line in the Frame Memory will be written as the first line after the last line of the Top Fixed Area on the display as illustrated below:

This command Start the scrolling.

Exit from V-scrolling mode by commands Partial mode On (12h) or Normal mode On (13h).

When MADCTR ML=0

Example:

When Top Fixed Area=Bottom Fixed Area=00, Vertical Scrolling Area=132 and Vertical Scrolling Pointer SSA='3'.

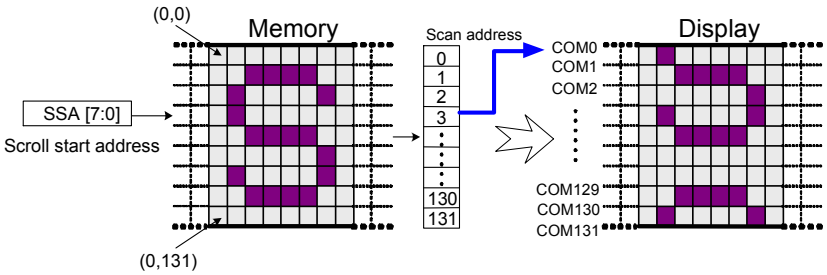

When MADCTR ML=1

Example:

When Top Fixed Area=Bottom Fixed Area=00, Vertical Scrolling Area=132 and Vertical Scrolling Pointer SSA='3'.

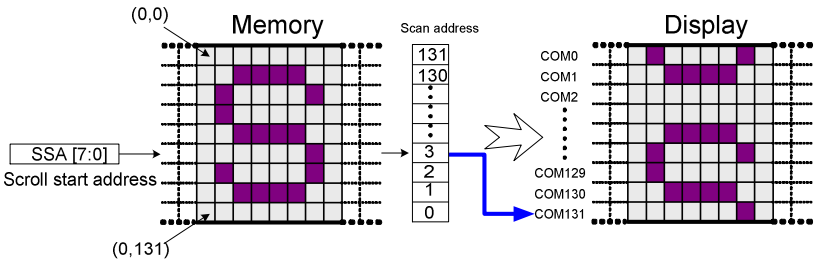

NOTE: When new Pointer position and Picture Data are sent, the result on the display will happen at the next Panel Scan to avoid tearing effect.

SSA refers to the Frame Memory line Pointer.

<table>
<tr><td>Restriction</td><td>Since the value of the Vertical Scrolling Start Address is absolute (with reference to the Frame Memory), it must not enter the fixed area (defined by Vertical Scrolling Definition (33h)-otherwise undesirable image will be displayed on the Panel.
SSA [7:0] is based on line unit.
SSA [6:0] = 00h, 01h, 02h, 03h, … , 83h</td></tr>
<tr><td>Register Availability</td><td><table>
<tr><td>Status</td><td>Availability</td></tr>
<tr><td>Normal Mode On, Idle Mode Off, Sleep Out</td><td>Yes</td></tr>
<tr><td>Normal Mode On, Idle Mode On, Sleep Out</td><td>Yes</td></tr>
<tr><td>Partial Mode On, Idle Mode Off, Sleep Out</td><td>No</td></tr>
<tr><td>Partial Mode On, Idle Mode On, Sleep Out</td><td>No</td></tr>
<tr><td>Sleep In</td><td>Yes</td></tr>
</table></td></tr>
<tr><td>Default</td><td><table>
<tr><td>Status</td><td>Default Value (SSA[7:0])</td></tr>
<tr><td>Power On Sequence</td><td>00h</td></tr>
<tr><td>S/W Reset</td><td>00h</td></tr>
<tr><td>H/W Reset</td><td>00h</td></tr>
</table></td></tr>
<tr><td>Flow Chart</td><td>See Vertical Scrolling Definition (33h) description.</td></tr>
</table>

9.1.33. IDMOFF: Idle Mode Off (38h)

Command	*A0*	*/RD*	*/WR*	*D7*	*D6*	*D5*	*D4*	*D3*	*D2*	*D1*	*D0*	*Hex*
IDMOFF	0	1	0	0	0	1	1	1	0	0	0	**(38h)**
Parameter	No Parameter											

Description	This command is used to recover from Idle mode on. There will be no abnormal visible effect on the display mode change transition. In the idle off mode, 1. LCD can display maximum 262,144 colors. 2. Normal frame frequency is applied.
Restriction	This command has no effect when module is already in idle off mode.

Register Availability

Status	Availability
Normal Mode On, Idle Mode Off, Sleep Out	Yes
Normal Mode On, Idle Mode On, Sleep Out	Yes
Partial Mode On, Idle Mode Off, Sleep Out	Yes
Partial Mode On, Idle Mode On, Sleep Out	Yes
Sleep In	Yes

Default

Status	Default Value
Power On Sequence	Idle mode off
S/W Reset	Idle mode off
H/W Reset	Idle mode off

Flow Chart

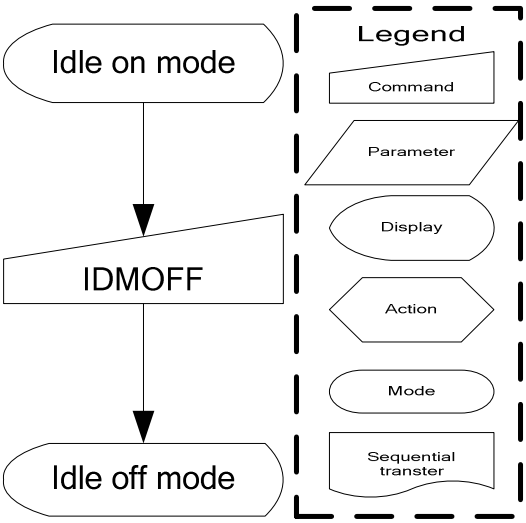

9.1.34. IDMON: Idle Mode On (39h)

Command	*A0*	*/RD*	*/WR*	*D7*	*D6*	*D5*	*D4*	*D3*	*D2*	*D1*	*D0*	*Hex*
IDMON	0	1	0	0	0	1	1	1	0	0	1	**(39h)**
Parameter	No Parameter											

Description

This command is used to enter into Idle mode on.

There will be no abnormal visible effect on the display mode change transition. In the idle on mode,

1. Color expression is reduced. The primary and the secondary colors using MSB of each R, G and B in the Frame Memory, 8 color depth data is displayed.
2. 8-Color mode frame frequency is applied.
3. Exit from IDMON by Idle Mode Off (38h) command

(Example)

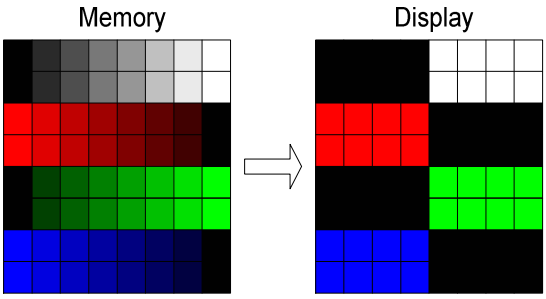

"X": don't care

Color	R_5 R_4 R_3 R_2 R_1 R_0	G_5 G_4 G_3 G_2 G_1 G_0	B_5 B_4 B_3 B_2 B_1 B_0
Black	0XXXXX	0XXXXX	0XXXXX
Blue	0XXXXX	0XXXXX	1XXXXX
Red	1XXXXX	0XXXXX	0XXXXX
Magenta	1XXXXX	0XXXXX	1XXXXX
Green	0XXXXX	1XXXXX	0XXXXX
Cyan	0XXXXX	1XXXXX	1XXXXX
Yellow	1XXXXX	1XXXXX	0XXXXX
White	1XXXXX	1XXXXX	1XXXXX

Restriction

This command has no effect when module is already in idle on mode.

Register Availability

Status	Availability
Normal Mode On, Idle Mode Off, Sleep Out	Yes
Normal Mode On, Idle Mode On, Sleep Out	Yes
Partial Mode On, Idle Mode Off, Sleep Out	Yes
Partial Mode On, Idle Mode On, Sleep Out	Yes
Sleep In	Yes

Default	Status	Default Value
	Power On Sequence	Idle mode off
	S/W Reset	Idle mode off
	H/W Reset	Idle mode off
Flow Chart	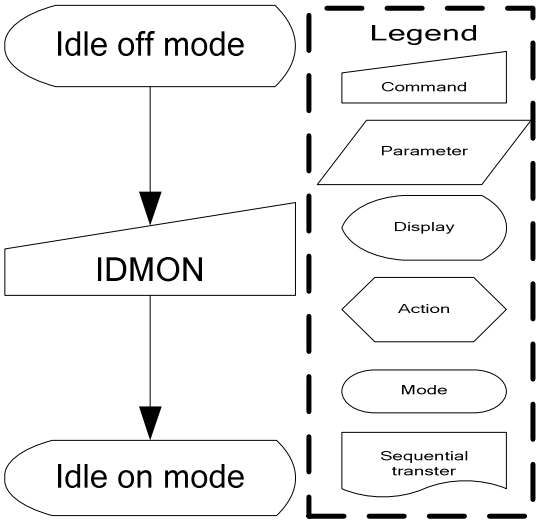	

9.1.35. COLMOD: Interface Pixel Format (3Ah)

Command	*A0*	*/RD*	*/WR*	*D7*	*D6*	*D5*	*D4*	*D3*	*D2*	*D1*	*D0*	*Hex*
COLMOD	0	1	0	0	0	1	1	1	0	1	0	**(3Ah)**
Parameter	1	1	0	-	-	-	-	-	P2	P1	P0	-

Description

This command is used to define the format of RGB picture data, which is to be transferred via the MCU Interface. The formats are shown in the table:

Interface Format	P2	P1	P0
Not Defined	0	0	0
Not Defined	0	0	1
8Bit/Pixel	0	1	0
12Bit/Pixel (Type A)	0	1	1
12Bit/Pixel (Type B)	1	0	0
16Bit/Pixel	1	0	1
18Bit/Pixel	1	1	0
24Bit/Pixel	1	1	1

Note: In 8 bit/pixel, 12bit/pixe,l or 16 bit/pixel mode, the LUT is applied to transfer data into the Frame Memory.

Restriction

There is no visible effect until the Frame Memory is written to.

Register Availability

Status	Availability
Normal Mode On, Idle Mode Off, Sleep Out	Yes
Normal Mode On, Idle Mode On, Sleep Out	Yes
Partial Mode On, Idle Mode Off, Sleep Out	Yes
Partial Mode On, Idle Mode On, Sleep Out	Yes
Sleep In	Yes

Default

Status	Default Value
Power On Sequence	05h (16Bit/Pixel)
S/W Reset	No Change
H/W Reset	05h (16Bit/Pixel)

Flow Chart	Example: 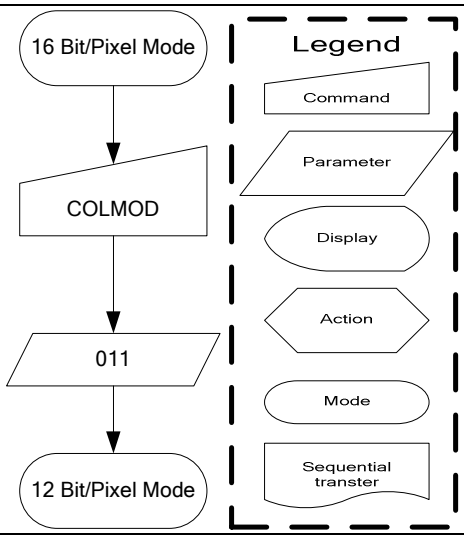

9.1.36. RDID1: Read ID1 Value (DAh)

Command	*A0*	*/RD*	*/WR*	*D7*	*D6*	*D5*	*D4*	*D3*	*D2*	*D1*	*D0*	*Hex*
RDID1	0	1	0	1	1	0	1	1	0	1	0	**(DAh)**
Dummy Read	1	0	1	-	-	-	-	-	-	-	-	-
2nd parameter	1	0	1	ID17	ID16	ID15	ID14	ID13	ID12	ID11	ID10	-

NOTE: "-" Don't care

Description	This read byte returns 8-bit LCD module's manufacturer ID D7-D0 (ID17 to ID10): LCD module's manufacturer ID. *NOTE: See command RDDID (04h), 2nd parameter.*
Restriction	
Register Availability	

Status	Availability
Normal Mode On, Idle Mode Off, Sleep Out	Yes
Normal Mode On, Idle Mode On, Sleep Out	Yes
Partial Mode On, Idle Mode Off, Sleep Out	Yes
Partial Mode On, Idle Mode On, Sleep Out	Yes
Sleep In	Yes

Default

Status	Default Value
Power On Sequence	Not fixed
S/W Reset	Not fixed
H/W Reset	Not fixed

Flow Chart

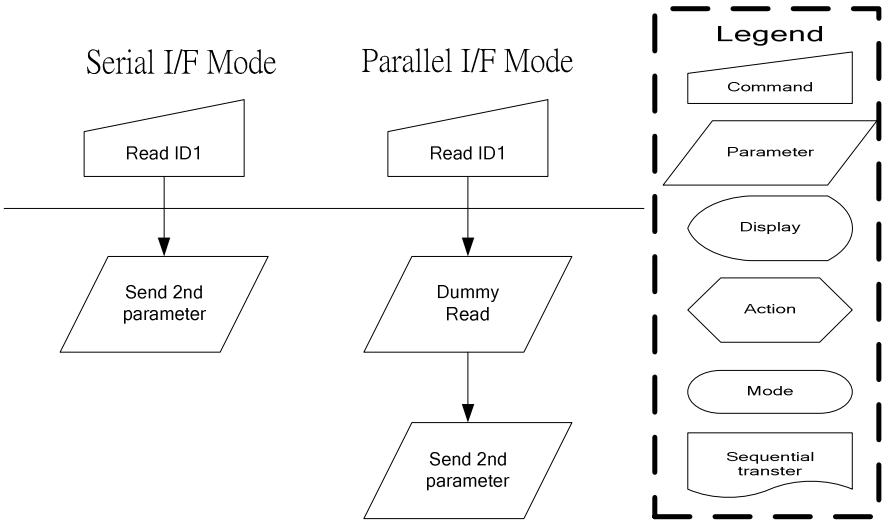

9.1.37. RDID2: Read ID2 Value (DBh)

Command	*A0*	*/RD*	*/WR*	*D7*	*D6*	*D5*	*D4*	*D3*	*D2*	*D1*	*D0*	*Hex*
RDID2	0	1	0	1	1	0	1	1	0	1	1	**(DBh)**
Dummy Read	1	0	1	-	-	-	-	-	-	-	-	-
2nd parameter	1	0	1	ID27	ID26	ID25	ID24	ID23	ID22	ID21	ID20	-

NOTE: "-" Don't care

Description	This read byte returns 8-bit LCD module/driver version ID D7-D0 (ID27 to ID20): LCD module/driver version ID Parameter Range: ID=80h to FFh *NOTE: See command RDDID (04h), 3rd parameter.*
Restriction	
Register Availability	

Status	Availability
Normal Mode On, Idle Mode Off, Sleep Out	Yes
Normal Mode On, Idle Mode On, Sleep Out	Yes
Partial Mode On, Idle Mode Off, Sleep Out	Yes
Partial Mode On, Idle Mode On, Sleep Out	Yes
Sleep In	Yes

Default

Status	Default Value
Power On Sequence	Not fixed
S/W Reset	Not fixed
H/W Reset	Not fixed

Flow Chart

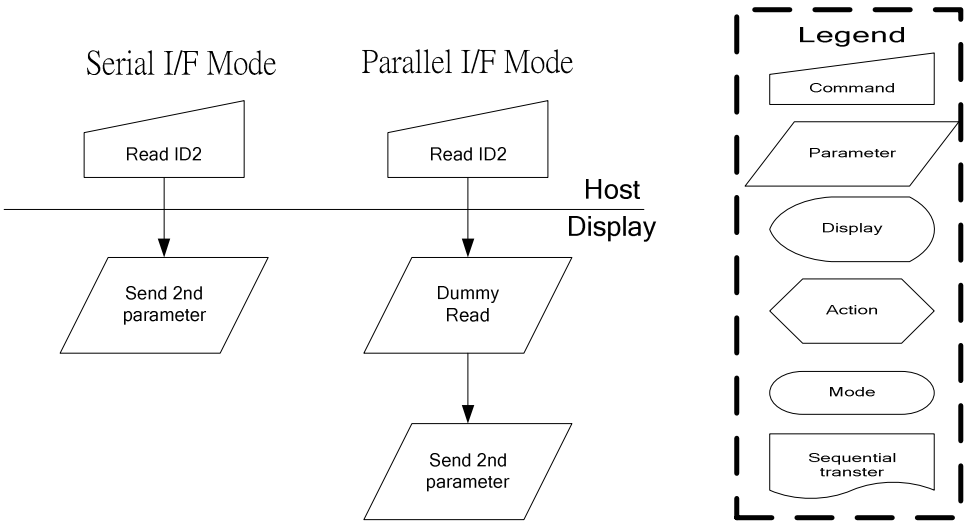

9.1.38. RDID3: Read ID3 Value (DCh)

Command	*A0*	*/RD*	*/WR*	*D7*	*D6*	*D5*	*D4*	*D3*	*D2*	*D1*	*D0*	*Hex*
RDID3	0	1	0	1	1	0	1	1	1	0	0	**(DCh)**
Dummy Read	1	0	1	-	-	-	-	-	-	-	-	-
2nd parameter	1	0	1	ID37	ID36	ID35	ID34	ID33	ID32	ID31	ID30	-

NOTE: "-" Don't care

Description

This read byte returns 8-bit LCD module/driver ID.

D7-D0 (ID37 to ID30): LCD module/driver ID.

NOTE: See command RDDID (04h), 4th parameter.

Restriction

Register Availability

Status	Availability
Normal Mode On, Idle Mode Off, Sleep Out	Yes
Normal Mode On, Idle Mode On, Sleep Out	Yes
Partial Mode On, Idle Mode Off, Sleep Out	Yes
Partial Mode On, Idle Mode On, Sleep Out	Yes
Sleep In	Yes

Default

Status	Default Value
Power On Sequence	Not fixed
S/W Reset	Not fixed
H/W Reset	Not fixed

Flow Chart

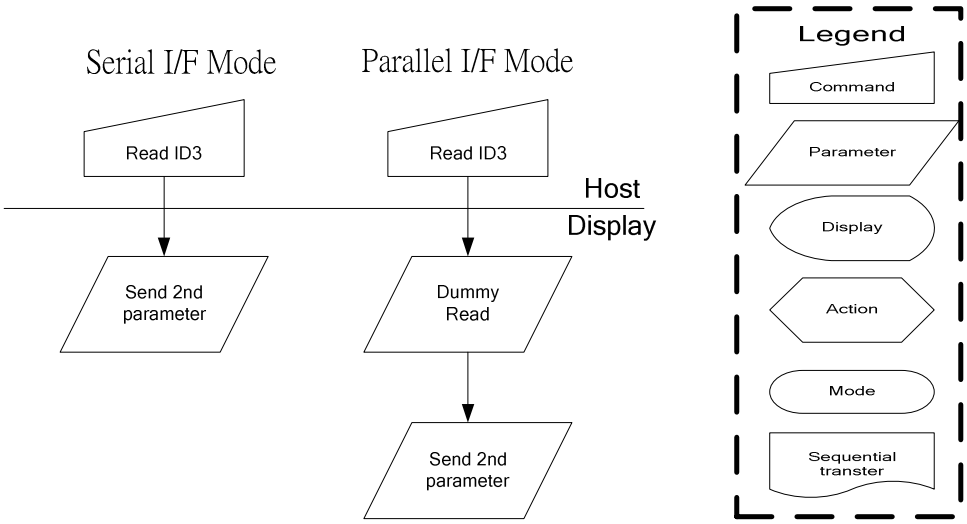

9.1.39. DutySet: Display Duty setting (B0H)

Command	*A0*	*/RD*	*/WR*	*D7*	*D6*	*D5*	*D4*	*D3*	*D2*	*D1*	*D0*	*Hex*
DutySet	0	1	0	1	0	1	1	0	0	0	0	**(B0h)**
Parameter	1	1	0	Du7	Du6	Du5	Du4	Du3	Du2	Du1	Du0	-

NOTE: "-" Don't care

Description

This command is used to set display duty. Command set = display duty numbers - 1.

Example:

Duty	Du7	Du6	Du5	Du4	Du3	Du2	Du1	Du0	Command set= Display duty numbers-1
Example: 1/132 duty	1	0	0	0	0	0	1	1	132-1=131

Restriction

Display duty must > 4 (1/4 duty)

Register Availability

Status	Availability
Normal Mode On, Idle Mode Off, Sleep Out	Yes
Normal Mode On, Idle Mode On, Sleep Out	Yes
Partial Mode On, Idle Mode Off, Sleep Out	Yes
Partial Mode On, Idle Mode On, Sleep Out	Yes
Sleep In	Yes

Default

Status	Default Value (Du[7:0])
Power On Sequence	10000011b (83h)
S/W Reset	10000011b (83h)
H/W Reset	10000011b (83h)

Flow Chart

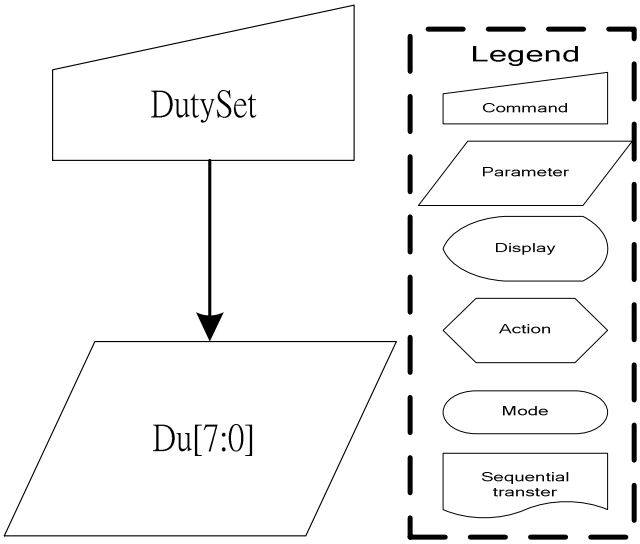

9.1.40. FirstCom: First Com. Page address (B1H)

Command	*A0*	*/RD*	*/WR*	*D7*	*D6*	*D5*	*D4*	*D3*	*D2*	*D1*	*D0*	*Hex*
FirstCom	0	1	0	1	0	1	1	0	0	0	1	**(B1h)**
Parameter	1	1	0	F7	F6	F5	F4	F3	F2	F1	F0	-

NOTE: "-" Don't care

Description

This command defines the first output COM number that mapping to the RAM page address 0. For detail setting value, please see the table as below.

F7	F6	F5	F4	F3	F2	F1	F0	Line address
0	0	0	0	0			0	0
0	0	0	0	0			1	1
0	0	0	0	1			0	2
0	0	0	0	1			1	3
0	:	:	:	:			:	:
1	0	0	0	0	0	1	1	131

Example:

If FirstCom=8, common 8 would output the data of RAM page address 0.

Restriction

Register Availability

Status	Availability
Normal Mode On, Idle Mode Off, Sleep Out	Yes
Normal Mode On, Idle Mode On, Sleep Out	Yes
Partial Mode On, Idle Mode Off, Sleep Out	Yes
Partial Mode On, Idle Mode On, Sleep Out	Yes
Sleep In	Yes

Default

Status	Default Value (F[7:0])
Power On Sequence	00h
S/W Reset	00h
H/W Reset	00h

Flow Chart

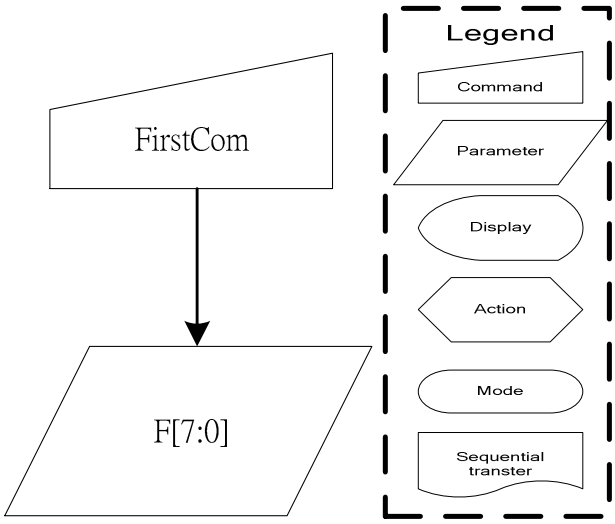

9.1.41. OscDiv: FOSC Divider (B3H)

Command	*A0*	*/RD*	*/WR*	*D7*	*D6*	*D5*	*D4*	*D3*	*D2*	*D1*	*D0*	*Hex*
OscDiv	0	1	0	1	0	1	1	0	0	1	1	**(B3h)**
Parameter	1	1	0	-	-	-	-	-	-	CLD1	CLD0	-

NOTE: "-" Don't care

Description

This command is used to specify the Fosc dividing ratio.

CLD1, CLD0: Fosc dividing ratio. They are used to change number of dividing stages of internal clock.

CLD1	CLD0	Fosc dividing ratio
0	0	Not divide
0	1	2 divisions
1	0	4 divisions
1	1	8 divisions

Restriction

Register Availability

Status	Availability
Normal Mode On, Idle Mode Off, Sleep Out	Yes
Normal Mode On, Idle Mode On, Sleep Out	Yes
Partial Mode On, Idle Mode Off, Sleep Out	Yes
Partial Mode On, Idle Mode On, Sleep Out	Yes
Sleep In	Yes

Default

Status	Default Value (CLD[0:1])
Power On Sequence	00b
S/W Reset	00b
H/W Reset	00b

Flow Chart

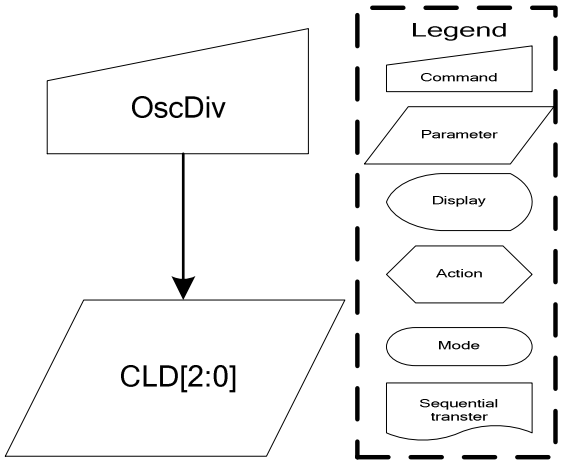

9.1.42. NLInvSet: N-Line control (B5H)

Command	*A0*	*/RD*	*/WR*	*D7*	*D6*	*D5*	*D4*	*D3*	*D2*	*D1*	*D0*	*Hex*
NLInvSet	0	1	0	1	0	1	1	0	1	0	1	**(B5h)**
Parameter	1	1	0	M	N6	N5	N4	N3	N2	N1	N0	-

NOTE: "-" Don't care

Description

This command is used to set the inverted line number with range of 2 to (duty-1) to improve display quality. When M=0, inversion occurs in every frame; when M=1, inversion is independent from frames. If N[6:0]=0, N-line inversion function is disable.

Line inversion numbers=N[6:0] +1.

Example:

If N[6:0]=7, inversion occurs per 8 line.

Restriction

Register Availability

Status	Availability
Normal Mode On, Idle Mode Off, Sleep Out	Yes
Normal Mode On, Idle Mode On, Sleep Out	Yes
Partial Mode On, Idle Mode Off, Sleep Out	Yes
Partial Mode On, Idle Mode On, Sleep Out	Yes
Sleep In	Yes

Default

Status	Default Value	
	M	N[6:0]
Power On Sequence	0b	0000000b
S/W Reset	0b	0000000b
H/W Reset	0b	0000000b

Flow Chart

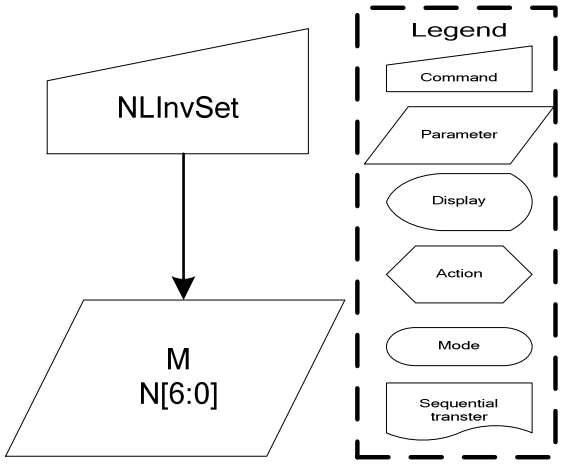

9.1.43. ComScanDir: Com/Seg Scan Direction for glass layout (B7H)

Command	*A0*	*/RD*	*/WR*	*D7*	*D6*	*D5*	*D4*	*D3*	*D2*	*D1*	*D0*	*Hex*
ComScanDir	0	1	0	1	0	1	1	0	1	1	1	**(B7h)**
Parameter	1	1	0	0	SMX	0	0	SBGR	0	-	-	-

NOTE: "-" Don't care

Description

	Function	0	1
SMX	Inverse the MX setting	Keep MX	Inverse MX
SBGR	Inverse the BGR setting	Keep BGR	Inverse BGR

Restriction

Register Availability

Status	Availability
Normal Mode On, Idle Mode Off, Sleep Out	Yes
Normal Mode On, Idle Mode On, Sleep Out	Yes
Partial Mode On, Idle Mode Off, Sleep Out	Yes
Partial Mode On, Idle Mode On, Sleep Out	Yes
Sleep In	Yes

Default

Status	Default Value
Power On Sequence	4Ah
S/W Reset	4Ah
H/W Reset	4Ah

Flow Chart

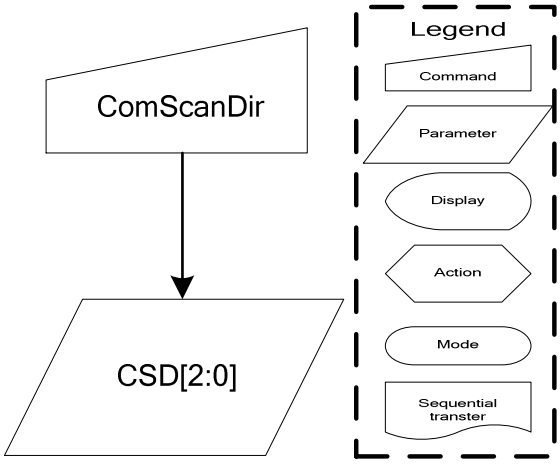

9.1.44. RMWIN: Read Modify Write control in (B8H)

Command	*A0*	*/RD*	*/WR*	*D7*	*D6*	*D5*	*D4*	*D3*	*D2*	*D1*	*D0*	*Hex*
RMWIN	0	1	0	1	0	1	1	1	0	0	0	**(B8h)**
Parameter	No Parameter											

NOTE: "-" Don't care

Description	Read modify write control IN
Restriction	
Register Availability	

Status	Availability
Normal Mode On, Idle Mode Off, Sleep Out	Yes
Normal Mode On, Idle Mode On, Sleep Out	Yes
Partial Mode On, Idle Mode Off, Sleep Out	Yes
Partial Mode On, Idle Mode On, Sleep Out	Yes
Sleep In	Yes

Default

Status	Default Value
Power On Sequence	--
S/W Reset	--
H/W Reset	--

9.1.45. RMWOUT: Read Modify Write control out(B9H)

Command	*A0*	*/RD*	*/WR*	*D7*	*D6*	*D5*	*D4*	*D3*	*D2*	*D1*	*D0*	*Hex*
RMWOUT	0	1	0	1	0	1	1	1	0	0	1	**(B9h)**
Parameter	No Parameter											

NOTE: "-" Don't care

Description	Read modify write control OUT
Restriction	
Register Availability	

Status	Availability
Normal Mode On, Idle Mode Off, Sleep Out	Yes
Normal Mode On, Idle Mode On, Sleep Out	Yes
Partial Mode On, Idle Mode Off, Sleep Out	Yes
Partial Mode On, Idle Mode On, Sleep Out	Yes
Sleep In	Yes

Default

Status	Default Value
Power On Sequence	--
S/W Reset	--
H/W Reset	--

9.1.46. VopSet: Vop set (C0H)

Command	*A0*	*/RD*	*/WR*	*D7*	*D6*	*D5*	*D4*	*D3*	*D2*	*D1*	*D0*	*Hex*
VopSet	0	1	0	1	1	0	0	0	0	0	0	**(C0h)**
1st parameter	1	1	0	Vop7	Vop6	Vop5	Vop4	Vop3	Vop2	Vop1	Vop0	-
2nd parameter	1	1	0	-	-	-	-	-	-	-	Vop8	

NOTE: "-" Don't care

Description	The command is used to program the optimum LCD supply voltage V0. Please see Section 7.10 for reference.
Restriction	

Register Availability

Status	Availability
Normal Mode On, Idle Mode Off, Sleep Out	Yes
Normal Mode On, Idle Mode On, Sleep Out	Yes
Partial Mode On, Idle Mode Off, Sleep Out	Yes
Partial Mode On, Idle Mode On, Sleep Out	Yes
Sleep In	Yes

Default

Status	Default Value (Vop=12V)	
	Vop8	Vop[7:0]
Power On Sequence	0	11010010b (D2h)
S/W Reset	0	11010010b (D2h)
H/W Reset	0	11010010b (D2h)

Flow Chart

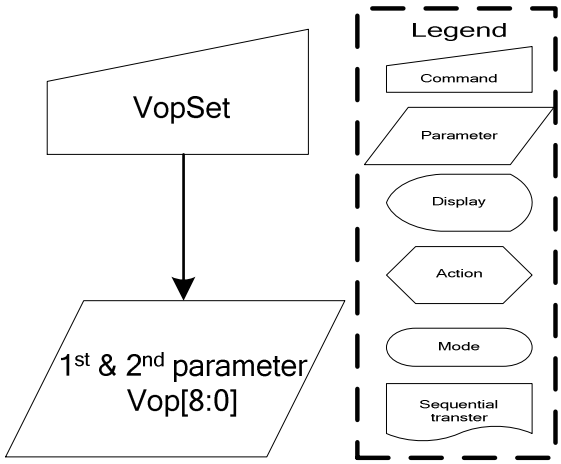

9.1.47. VopOfsetInc: Vop Increase 1 (C1H)

Command	*A0*	*/RD*	*/WR*	*D7*	*D6*	*D5*	*D4*	*D3*	*D2*	*D1*	*D0*	*Hex*
VopOfsetInc	0	1	0	1	1	0	0	0	0	0	1	**(C1h)**

NOTE: "-" Don't care

Description

With the VopOfsetInc and VopOfsetDec command the V_{LCD} voltage and therewith the contrast of the LCD can be adjusted. This command increases the value of Vop offset register by 1.

If you set the electronic control value to 1111111, the control value is set to 0000000 after this command has been executed.

Restriction

Register Availability

Status	Availability
Normal Mode On, Idle Mode Off, Sleep Out	Yes
Normal Mode On, Idle Mode On, Sleep Out	Yes
Partial Mode On, Idle Mode Off, Sleep Out	Yes
Partial Mode On, Idle Mode On, Sleep Out	Yes
Sleep In	Yes

Default

Status	Default Value
Power On Sequence	--
S/W Reset	--
H/W Reset	--

Flow Chart

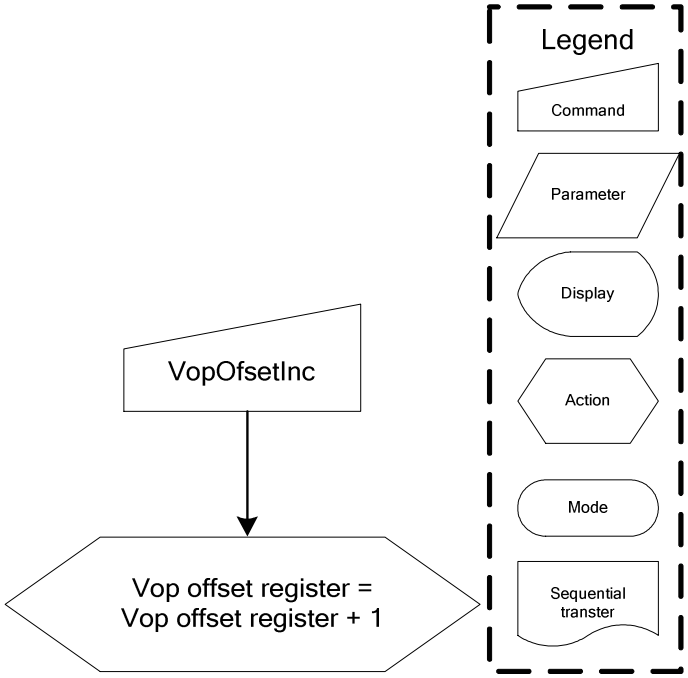

9.1.48. VopOfsetDec: Vop Decrease 1 (C2H)

Command	*A0*	*/RD*	*/WR*	*D7*	*D6*	*D5*	*D4*	*D3*	*D2*	*D1*	*D0*	*Hex*
VopOfsetDec	0	1	0	1	1	0	0	0	0	1	0	**(C2h)**

NOTE: "-" Don't care

Description

With the VopOfsetInc and VopOfsetDec command the V_{LCD} voltage and therewith the contrast of the LCD can be adjusted. This command decreases the value of Vop offset register by 1.

If you set the electronic control value to 0000000, the control value is set to 1111111 after this command has been executed.

Electronic Control Value	Decimal Equivalent	V0 Offset
0111111	63	+2520 mV
0111110	62	+2480 mV
0111101	61	+2440 mV
…	…	…
0000010	2	+80 mV
0000001	1	+40 mV
0000000	0	0 mV
1111111	-1	-40 mV
1111110	-2	-80 mV
…	…	…
1100010	-62	-2480 mV
1100001	-63	-2520 mV
1100000	-64	-2560mV

Table 9.1-1 Possible Vop[6:0] values

Restriction

Register Availability

Status	Availability
Normal Mode On, Idle Mode Off, Sleep Out	Yes
Normal Mode On, Idle Mode On, Sleep Out	Yes
Partial Mode On, Idle Mode Off, Sleep Out	Yes
Partial Mode On, Idle Mode On, Sleep Out	Yes
Sleep In	Yes

Default

Status	Default Value
Power On Sequence	--
S/W Reset	--
H/W Reset	--

Flow Chart	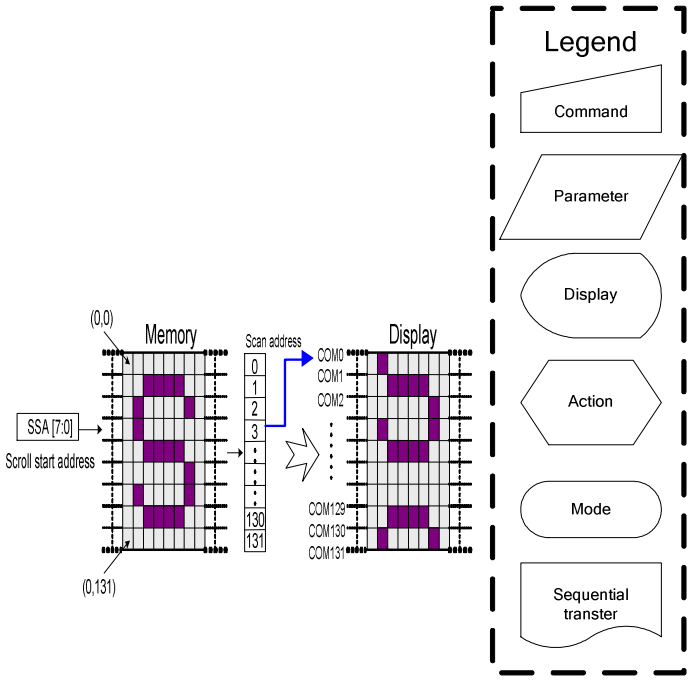

Legend
Command
Parameter
Display
Action
Mode
Sequential transter
(0,0)
Memory
Scan address
Display
SSA [7:0]
Scroll start address
0
1
2
3
130
131
COM0
COM1
COM2
COM129
COM130
COM131
(0,131)

9.1.49. BiasSel: Bias Selection (C3H)

Command	*A0*	*/RD*	*/WR*	*D7*	*D6*	*D5*	*D4*	*D3*	*D2*	*D1*	*D0*	*Hex*
BiasSel	0	1	0	1	1	0	0	0	0	1	1	**(C3h)**
Parameter	1	1	0	-	-	-	-	-	Bias2	Bias1	Bias0	-

NOTE: "-" Don't care

Description

Select LCD bias ratio of the voltage required for driving the LCD.

Bais2	Bais1	Bais0	LCD bias
0	0	0	1/12
0	0	1	1/11
0	1	0	1/10
0	1	1	1/9
1	0	0	1/8
1	0	1	1/7
1	1	0	1/6
1	1	1	1/5

Restriction

Register Availability

Status	Availability
Normal Mode On, Idle Mode Off, Sleep Out	Yes
Normal Mode On, Idle Mode On, Sleep Out	Yes
Partial Mode On, Idle Mode Off, Sleep Out	Yes
Partial Mode On, Idle Mode On, Sleep Out	Yes
Sleep In	Yes

Default

Status	Default Value (Bias[2:0])
Power On Sequence	110b
S/W Reset	110b
H/W Reset	110b

Flow Chart

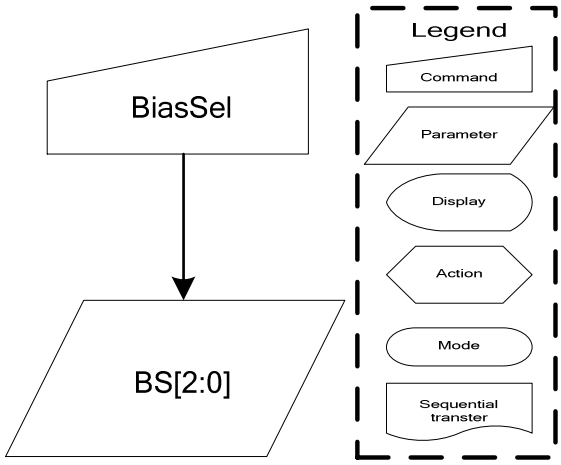

9.1.50. BstPmpXSel: Booster Setting (C4H)

Command	*A0*	*/RD*	*/WR*	*D7*	*D6*	*D5*	*D4*	*D3*	*D2*	*D1*	*D0*	*Hex*
BstPmpXSel	0	1	0	1	1	0	0	0	1	0	0	**(C4h)**
Parameter	1	1	0	-	-	-	-	-	BST2	BST 1	BST0	-

NOTE: "-" Don't care

Description

Booster setting

BST2	BST1	BST0	
0	0	0	x1 boosting circuit (Booster off)
0	0	1	x2 boosting circuit
0	1	0	x3 boosting circuit
0	1	1	x4 boosting circuit
1	0	0	x5 boosting circuit
1	0	1	x6 boosting circuit
1	1	0	x7 boosting circuit
1	1	1	x8 boosting circuit

Restriction

Register Availability

Status	Availability
Normal Mode On, Idle Mode Off, Sleep Out	Yes
Normal Mode On, Idle Mode On, Sleep Out	Yes
Partial Mode On, Idle Mode Off, Sleep Out	Yes
Partial Mode On, Idle Mode On, Sleep Out	Yes
Sleep In	Yes

Default

Status	Default Value (BST[2:0])
Power On Sequence	110b
S/W Reset	110b
H/W Reset	110b

Flow Chart	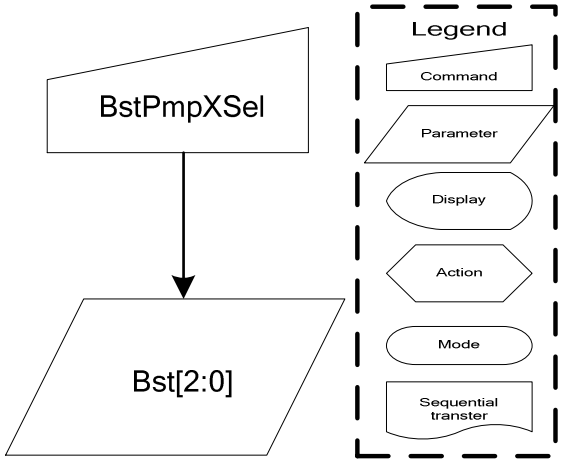 BstPmpXSel Bst[2:0] Legend Command Parameter Display Action Mode Sequential transter

9.1.51. BstEffSel: Booster Efficiency selection (C5H)

Command	*A0*	*/RD*	*/WR*	*D7*	*D6*	*D5*	*D4*	*D3*	*D2*	*D1*	*D0*	*Hex*
BstEffSel	0	1	0	1	1	0	0	0	1	0	1	**(C5h)**
Parameter	1	1	0	-	-	-	-	-	-	BTF1	BTF0	-

NOTE: "-" Don't care

Description

Booster Efficiency set

BTF1	BTF0	Frequency (Hz)
0	0	Level 1
0	1	Level 2 (default)
1	0	Level 3

By Booster Stages (2X, 3X, 4X, 5X, 6X, 7X, 8X) and Booster Efficiency (Level1~3) commands, we could easily set the best Booster performance with suitable current consumption. If the Booster Efficiency is set to higher level (level3 is higher than level1). The Boost Efficiency is better than lower level, and it just need few more power consumption current.

Restriction

Register Availability

Status	Availability
Normal Mode On, Idle Mode Off, Sleep Out	Yes
Normal Mode On, Idle Mode On, Sleep Out	Yes
Partial Mode On, Idle Mode Off, Sleep Out	Yes
Partial Mode On, Idle Mode On, Sleep Out	Yes
Sleep In	Yes

Default

Status	Default Value (BTF[1:0])
Power On Sequence	01b
S/W Reset	01b
H/W Reset	01b

Flow Chart	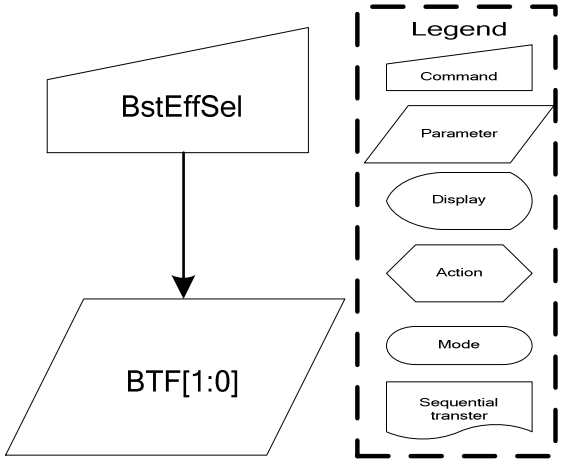 BstEffSel BTF[1:0] Legend Command Parameter Display Action Mode Sequential transter

9.1.52. VopOffset: Vop offset fuse bit adjust (C7H)

Command	*A0*	*/RD*	*/WR*	*D7*	*D6*	*D5*	*D4*	*D3*	*D2*	*D1*	*D0*	*Hex*
VopOffset	0	1	0	1	1	0	0	0	1	1	1	**(C7h)**
Parameter1	1	1	0	VOS7	VOS6	VOS5	VOS4	VOS3	VOS2	VOS1	VOS0	**-**
Parameter2	1	1	0	-	-	-	-	-	-	-	VOS8	**-**

NOTE: "-" Don't care

Description	The command is used to the Vop offset for V0.
Restriction	

Register Availability

Status	Availability
Normal Mode On, Idle Mode Off, Sleep Out	Yes
Normal Mode On, Idle Mode On, Sleep Out	Yes
Partial Mode On, Idle Mode Off, Sleep Out	Yes
Partial Mode On, Idle Mode On, Sleep Out	Yes
Sleep In	Yes

Default

Status	Default Value	
	VOS8	VOS[7:0]
Power On Sequence	0	0
S/W Reset	0	0
H/W Reset	0	0

Flow Chart

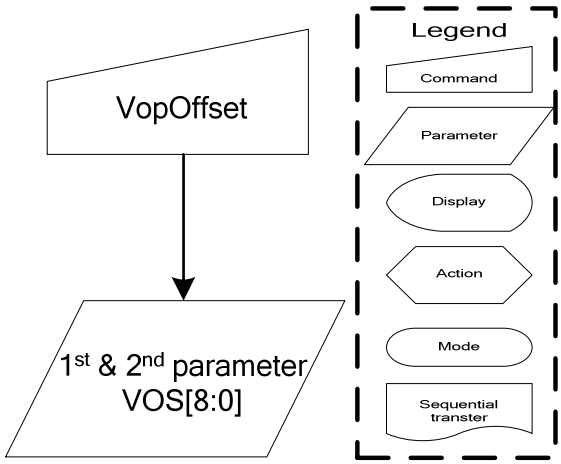

9.1.53. VgSorcSel: Vg source control (CBH)

Command	*A0*	*/RD*	*/WR*	*D7*	*D6*	*D5*	*D4*	*D3*	*D2*	*D1*	*D0*	*Hex*
V3SorcSel	0	1	0	1	1	0	0	1	0	1	1	**(CBh)**
Parameter	1	1	0	-	-	-	-	-	-	-	2BT0	-

NOTE: "-" Don't care

Description	2BT0=0: Vg source comes from VDD2 ; 2BT0=1: Vg source comes from 2-times charge pump.
Restriction	
Register Availability	

Status	Availability
Normal Mode On, Idle Mode Off, Sleep Out	Yes
Normal Mode On, Idle Mode On, Sleep Out	Yes
Partial Mode On, Idle Mode Off, Sleep Out	Yes
Partial Mode On, Idle Mode On, Sleep Out	Yes
Sleep In	Yes

Default

Status	Default Value (2BT0)
Power On Sequence	1
S/W Reset	1
H/W Reset	1

Flow Chart

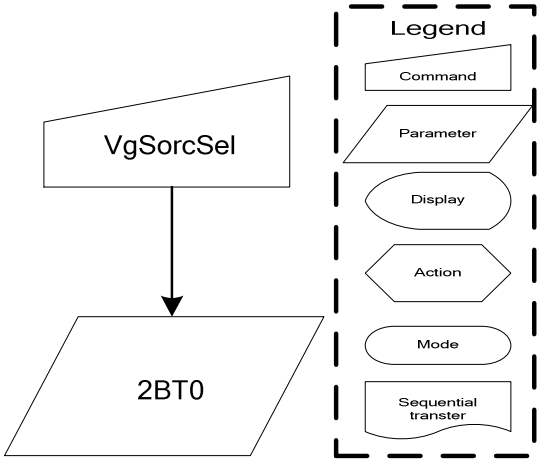

9.1.54. ID1Set : ID1 setting (CCH)

Command	*A0*	*/RD*	*/WR*	*D7*	*D6*	*D5*	*D4*	*D3*	*D2*	*D1*	*D0*	*Hex*
ID1Set	0	1	0	1	1	0	0	1	1	0	0	**(CCh)**
Parameter	1	1	0	ID1_7	ID1_6	ID1_5	ID1_4	ID1_3	ID1_2	ID1_1	ID1_0	**-**

NOTE: "-" Don't care

Description	ID1 setting for OTP program data input
Restriction	
Register Availability	

Status	Availability
Normal Mode On, Idle Mode Off, Sleep Out	Yes
Normal Mode On, Idle Mode On, Sleep Out	Yes
Partial Mode On, Idle Mode Off, Sleep Out	Yes
Partial Mode On, Idle Mode On, Sleep Out	Yes
Sleep In	Yes

Default

Status	Default Value
Power On Sequence	00h
S/W Reset	00h
H/W Reset	00h

Flow Chart

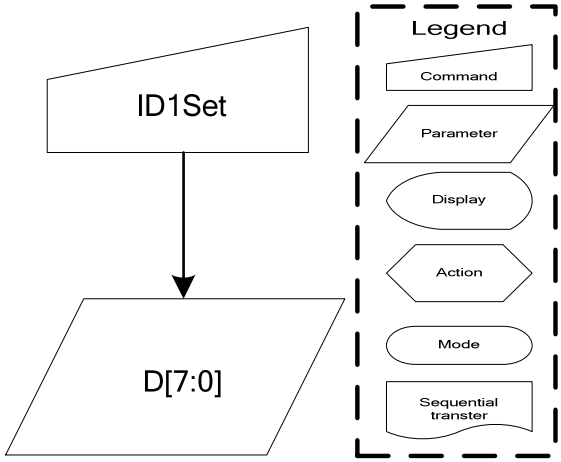

9.1.55. ID2Set : ID2 setting (CDH)

Command	*A0*	*/RD*	*/WR*	*D7*	*D6*	*D5*	*D4*	*D3*	*D2*	*D1*	*D0*	*Hex*
ID2Set	0	1	0	1	1	0	0	1	1	0	1	**(CDh)**
Parameter	1	1	0	1	ID2_6	ID2_5	ID2_4	ID2_3	ID2_2	ID2_1	ID2_0	**-**

NOTE: "-" Don't care

Description	ID2 setting for OTP program data input
Restriction	

Register Availability

Status	Availability
Normal Mode On, Idle Mode Off, Sleep Out	Yes
Normal Mode On, Idle Mode On, Sleep Out	Yes
Partial Mode On, Idle Mode Off, Sleep Out	Yes
Partial Mode On, Idle Mode On, Sleep Out	Yes
Sleep In	Yes

Default

Status	Default Value
Power On Sequence	00h
S/W Reset	00h
H/W Reset	00h

Flow Chart

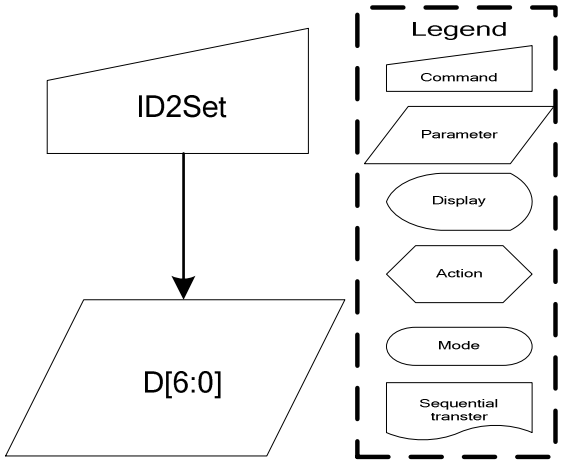

9.1.56. ID3Set : ID3 setting (CEH)

Command	*A0*	*/RD*	*/WR*	*D7*	*D6*	*D5*	*D4*	*D3*	*D2*	*D1*	*D0*	*Hex*
ID3Set	0	1	0	1	1	0	0	1	1	1	0	**(CEh)**
Parameter	1	1	0	ID3_7	ID3_6	ID3_5	ID3_4	ID3_3	ID3_2	ID3_1	ID3_0	**-**

NOTE: "-" Don't care

Description	ID3 setting for OTP program data input
Restriction	

Register Availability

Status	Availability
Normal Mode On, Idle Mode Off, Sleep Out	Yes
Normal Mode On, Idle Mode On, Sleep Out	Yes
Partial Mode On, Idle Mode Off, Sleep Out	Yes
Partial Mode On, Idle Mode On, Sleep Out	Yes
Sleep In	Yes

Default

Status	Default Value
Power On Sequence	00h
S/W Reset	00h
H/W Reset	00h

Flow Chart

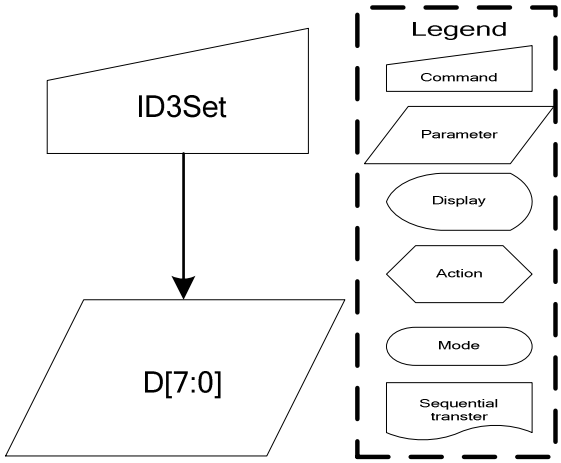

9.1.57. NASET: Analog circuit setting (D0H)

Command	*A0*	*/RD*	*/WR*	*D7*	*D6*	*D5*	*D4*	*D3*	*D2*	*D1*	*D0*	*Hex*
AutoLoadSet	0	1	0	1	1	0	1	0	0	0	0	**(D0h)**
Parameter	1	1	0	0	0	0	1	1	1	0	1	**(1Dh)**

NOTE: "-" Don't care

Description	Analog circuit setting. Such as follower selection, level shifter power mode selection.
Restriction	
Register Availability	

Status	Availability
Normal Mode On, Idle Mode Off, Sleep Out	Yes
Normal Mode On, Idle Mode On, Sleep Out	Yes
Partial Mode On, Idle Mode Off, Sleep Out	Yes
Partial Mode On, Idle Mode On, Sleep Out	Yes
Sleep In	Yes

Default

Status	Default Value D[7:0]
Power On Sequence	1Dh
S/W Reset	1Dh
H/W Reset	1Dh

Flow Chart

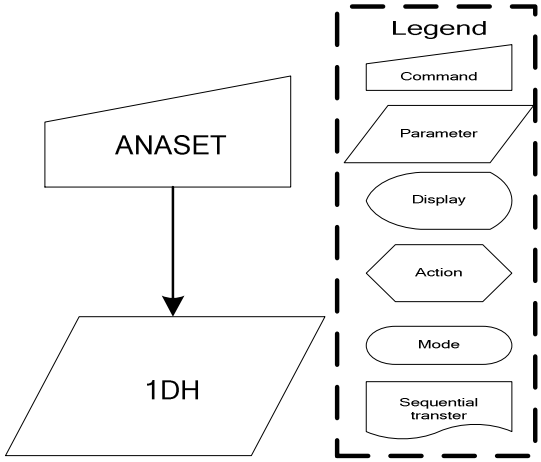

9.1.58. AutoLoadSet: mask rom data auto re-load control (D7H)

Command	*A0*	*/RD*	*/WR*	*D7*	*D6*	*D5*	*D4*	*D3*	*D2*	*D1*	*D0*	*Hex*
AutoLoadSet	0	1	0	1	1	0	1	0	1	1	1	**(D7h)**
Parameter	1	1	0	EXTE	OTPBE	-	ARD	1	1	1	1	**-**

NOTE: "-" Don't care

Description	Mask rom data auto re-load control EXTE : External command enable (OTP input), 1: enable, 0: disable OTPBE: OTPB auto-read enable (OTP input, force disable when ARD=0) ARD : OTP auto recovery enable control, 1: Disable OTP auto recovery, 0: Enable OTP auto recovery
Restriction	
Register Availability	

Status	Availability
Normal Mode On, Idle Mode Off, Sleep Out	Yes
Normal Mode On, Idle Mode On, Sleep Out	Yes
Partial Mode On, Idle Mode Off, Sleep Out	Yes
Partial Mode On, Idle Mode On, Sleep Out	Yes
Sleep In	Yes

Default

Status	Default ValueD[7:0]
Power On Sequence	00h
S/W Reset	00h
H/W Reset	00h

Flow Chart

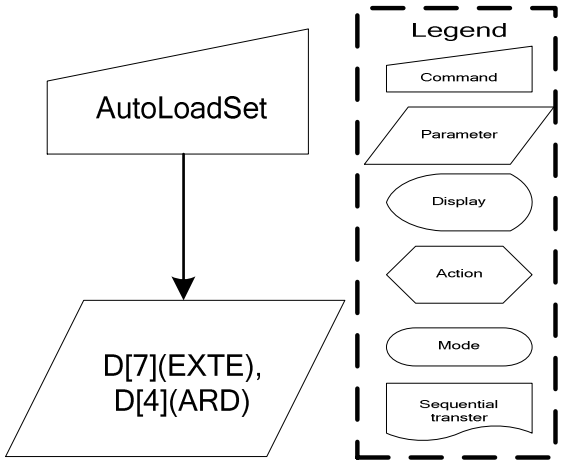

9.1.59. RDTstStatus: Read IC status (DEH)

Command	*A0*	*/RD*	*/WR*	*D7*	*D6*	*D5*	*D4*	*D3*	*D2*	*D1*	*D0*	*Hex*
RDTstStatus	0	1	0	1	1	0	1	1	1	1	0	**(DEh)**
Dummy Read	1	0	1	-	-	-	-	-	-	-	-	
Parameter	1	0	1	RD7	RD6	RD5	RD4	RD3	RD2	RD1	RD0	**-**

NOTE: "-" Don't care

Description	Read IC status. Contect of OTP / RDA / PWR_VOP read control (selection Byte by StusOutByteSel[3:0] control)
Restriction	
Register Availability	

Status	Availability
Normal Mode On, Idle Mode Off, Sleep Out	Yes
Normal Mode On, Idle Mode On, Sleep Out	Yes
Partial Mode On, Idle Mode Off, Sleep Out	Yes
Partial Mode On, Idle Mode On, Sleep Out	Yes
Sleep In	Yes

Default

Status	Default Value
Power On Sequence	-
S/W Reset	-
H/W Reset	-

Flow Chart

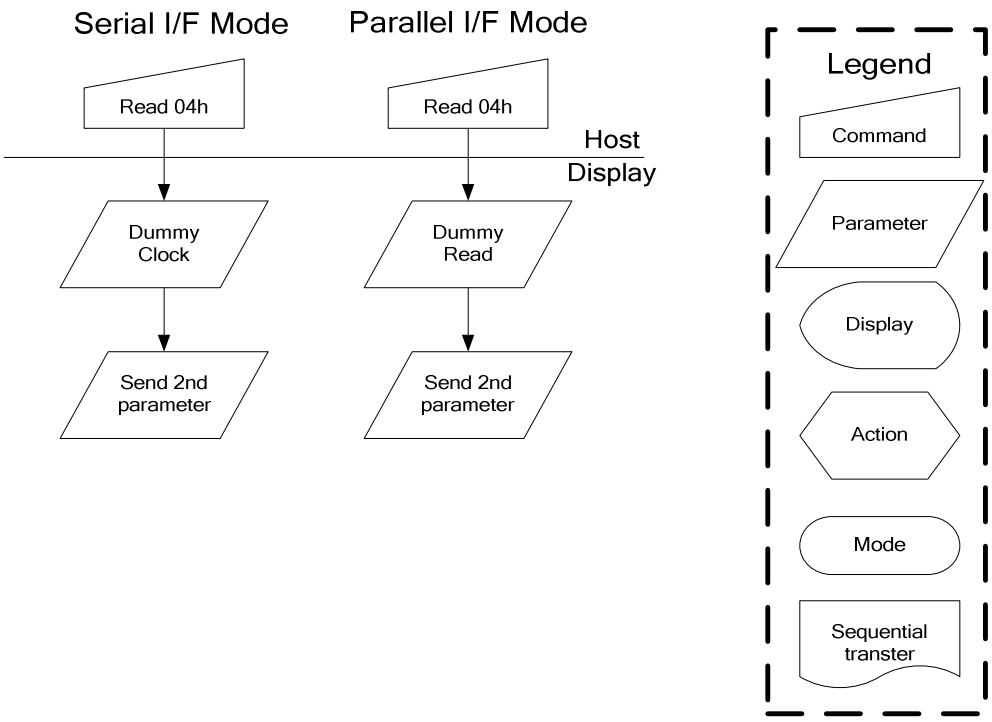

9.1.60. EPCTIN: Control OTP WR/XRD (E0H)

Command	*A0*	*/RD*	*/WR*	*D7*	*D6*	*D5*	*D4*	*D3*	*D2*	*D1*	*D0*	*Hex*
EPCTIN	0	1	0	1	1	1	0	0	0	0	0	**(E0h)**
Parameter	1	1	0	0	0	WR /XRD	0	0	0	0	0	-

NOTE: "-" Don't care

Description	WR/XRD: when setting "1" ➔ The Write Enable of OTP will be opened. WR/XRD: when setting "0" ➔ The Read Enable of OTP will be opened.
Restriction	
Register Availability	

Status	Availability
Normal Mode On, Idle Mode Off, Sleep Out	Yes
Normal Mode On, Idle Mode On, Sleep Out	Yes
Partial Mode On, Idle Mode Off, Sleep Out	Yes
Partial Mode On, Idle Mode On, Sleep Out	Yes
Sleep In	Yes

Default

Status	Default Value (WR/XRD)
Power On Sequence	0
S/W Reset	0
H/W Reset	0

Flow Chart

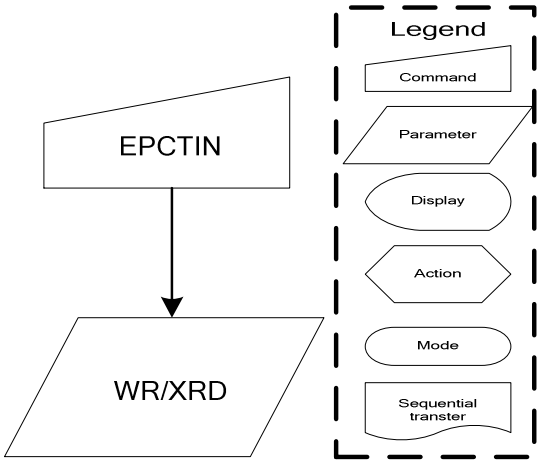

9.1.61. EPCOUT: OTP control cancel (E1H)

Command	*A0*	*/RD*	*/WR*	*D7*	*D6*	*D5*	*D4*	*D3*	*D2*	*D1*	*D0*	*Hex*
EPCOUT	0	1	0	1	1	1	0	0	0	0	1	**(E1h)**

NOTE: "-" Don't care

Description	IC exits the OTP control circuit when executing this command.
Restriction	
Register Availability	

Status	Availability
Normal Mode On, Idle Mode Off, Sleep Out	Yes
Normal Mode On, Idle Mode On, Sleep Out	Yes
Partial Mode On, Idle Mode Off, Sleep Out	Yes
Partial Mode On, Idle Mode On, Sleep Out	Yes
Sleep In	Yes

Default

Status	Default Value
Power On Sequence	--
S/W Reset	--
H/W Reset	--

Flow Chart

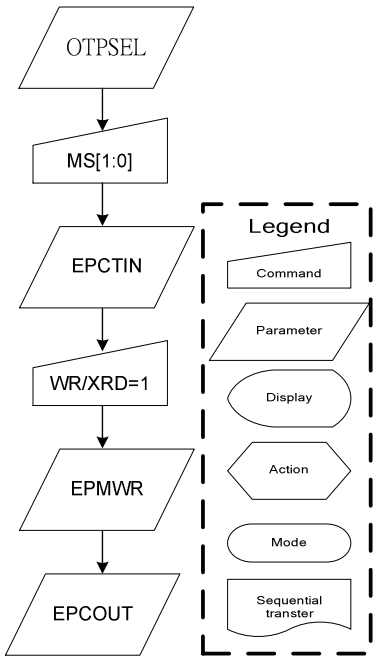

9.1.62. EPMWR: Write to OTP (E2H)

Command	*A0*	*/RD*	*/WR*	*D7*	*D6*	*D5*	*D4*	*D3*	*D2*	*D1*	*D0*	*Hex*
EPCOUT	0	1	0	1	1	1	0	0	0	1	0	**(E2h)**

NOTE: "-" Don't care

Description	IC actives trigger to start OTP programming when executing this command.
Restriction	
Register Availability	

Status	Availability
Normal Mode On, Idle Mode Off, Sleep Out	Yes
Normal Mode On, Idle Mode On, Sleep Out	Yes
Partial Mode On, Idle Mode Off, Sleep Out	Yes
Partial Mode On, Idle Mode On, Sleep Out	Yes
Sleep In	Yes

Default

Status	Default Value
Power On Sequence	--
S/W Reset	--
H/W Reset	--

Flow Chart

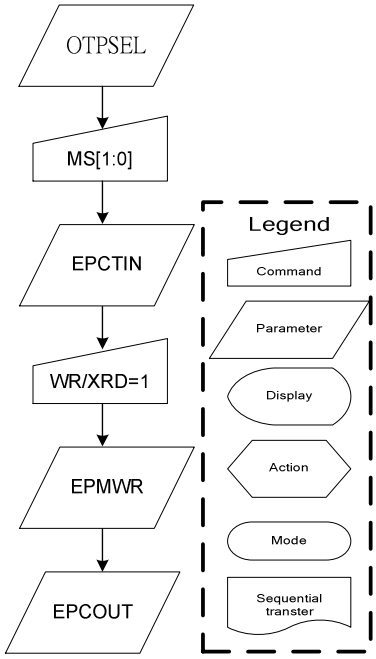

9.1.63. EPMRD: Read from OTP (E3H)

Command	*A0*	*/RD*	*/WR*	*D7*	*D6*	*D5*	*D4*	*D3*	*D2*	*D1*	*D0*	*Hex*
EPMRD	0	1	0	1	1	1	0	0	0	1	1	**(E3h)**

NOTE: "-" Don't care

Description	IC actives trigger to start OTP data download to circuit when executing this command.
Restriction	

Register Availability

Status	Availability
Normal Mode On, Idle Mode Off, Sleep Out	Yes
Normal Mode On, Idle Mode On, Sleep Out	Yes
Partial Mode On, Idle Mode Off, Sleep Out	Yes
Partial Mode On, Idle Mode On, Sleep Out	Yes
Sleep In	Yes

Default

Status	Default Value
Power On Sequence	
S/W Reset	
H/W Reset	

Flow Chart

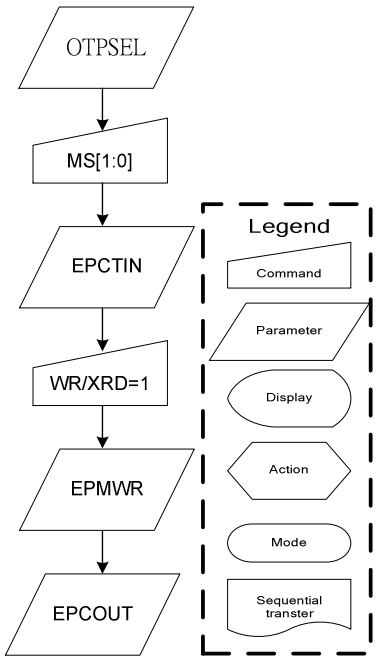

9.1.64. OTPSEL: OTP selection (E4H)

Command	*A0*	*/RD*	*/WR*	*D7*	*D6*	*D5*	*D4*	*D3*	*D2*	*D1*	*D0*	*Hex*
OTPSEL	0	1	0	1	1	1	0	0	1	0	0	**(E4h)**
Parameter	1	1	0	MS1	MS0	0	1	1	0	0	0	-

NOTE: "-" Don't care

Description

This command defines OTP/OTPA/OTPB selection for EEPROM control. Please see the table as below:

MS1	MS0	Mode
0	0	Disable
0	1	OTPC
1	0	OTPA
1	1	OTPB

Restriction

Register Availability

Status	Availability
Normal Mode On, Idle Mode Off, Sleep Out	Yes
Normal Mode On, Idle Mode On, Sleep Out	Yes
Partial Mode On, Idle Mode Off, Sleep Out	Yes
Partial Mode On, Idle Mode On, Sleep Out	Yes
Sleep In	Yes

Default

Status	Default Value (MS[1:0])
Power On Sequence	00
S/W Reset	00
H/W Reset	00

Flow Chart

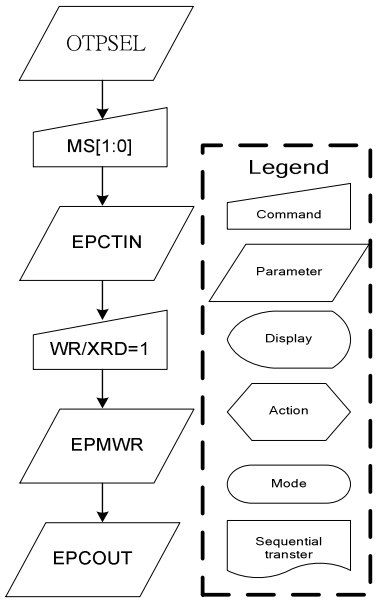

9.1.65. ROMSET: Programmable rom setting (E5H)

Command	*A0*	*/RD*	*/WR*	*D7*	*D6*	*D5*	*D4*	*D3*	*D2*	*D1*	*D0*	*Hex*
AutoLoadSet	0	1	0	0	1	1	1	0	1	0	1	**(E5h)**
Parameter	1	1	0	0	0	0	0	1	1	0	0	**(0Ch)**

NOTE: "-" Don't care

Description	Set the OTP writing timing. Value 0x0C is the best value for ST7637.
Restriction	

Register Availability

Status	Availability
Normal Mode On, Idle Mode Off, Sleep Out	Yes
Normal Mode On, Idle Mode On, Sleep Out	Yes
Partial Mode On, Idle Mode Off, Sleep Out	Yes
Partial Mode On, Idle Mode On, Sleep Out	Yes
Sleep In	Yes

Default

Status	Default Value D[7:0]
Power On Sequence	0Fh
S/W Reset	0Fh
H/W Reset	0Fh

Flow Chart

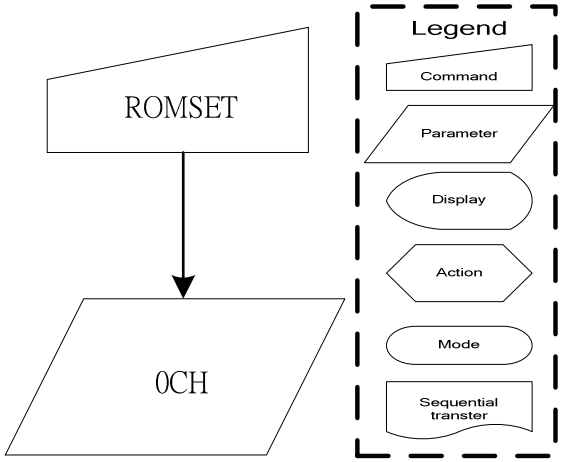

9.1.66. LVMS: Low voltage mode Setting (E7H & E8H)

	A0	RD	WR	D7	D6	D5	D4	D3	D2	D1	D0	HEX
Command 1	0	1	0	1	1	1	0	0	1	1	1	**(E7h)**
1st parameter	1	1	0	0	0	1	0	0	0	1	0	**(22h)**
Command 2	0	1	0	1	1	1	0	1	0	0	0	**(E8h)**
1st parameter	1	1	0	0	0	1	1	0	1	1	1	**(37h)**
2nd parameter	1	1	0	0	0	0	0	0	0	1	0	**(03h)**
3rd parameter	1	1	0	0	0	0	1	1	1	1	1	**(1Fh)**

Description

Low voltage mode setting.

Restriction

Register Availability

Status	Availability
Normal Mode On, Idle Mode Off, Sleep Out	Yes
Normal Mode On, Idle Mode On, Sleep Out	Yes
Partial Mode On, Idle Mode Off, Sleep Out	Yes
Partial Mode On, Idle Mode On, Sleep Out	Yes
Sleep In	Yes

Default

Status	Default Value			
	C1D1[7:0]	C2D1[7:0]	C2D2[7:0]	C2D3[7:0]
Power On Sequence	12h	36h	03h	16h
S/W Reset	12h	36h	03h	16h
H/W Reset	12h	36h	03h	16h

Flow Chart

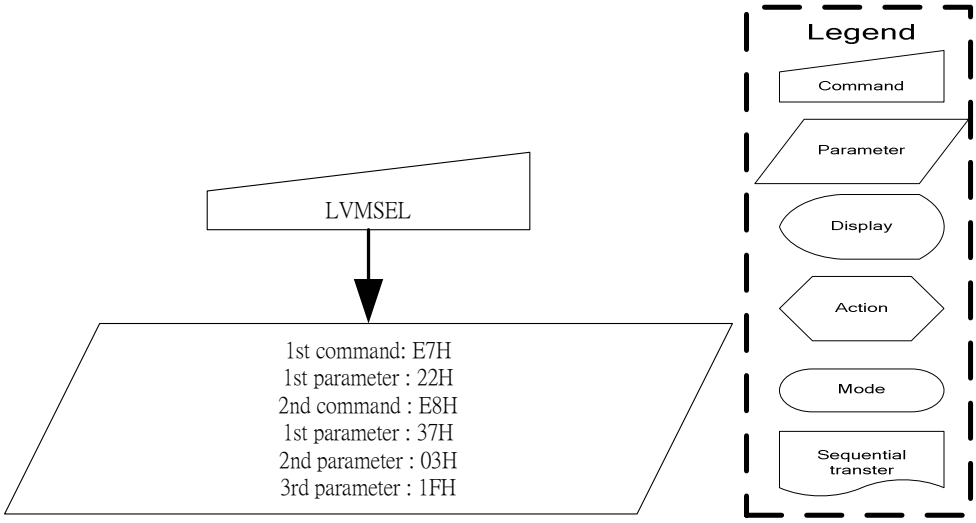

9.1.67. HPMSET : High Power Mode Setting (EBH)

	A0	RD	WR	D7	D6	D5	D4	D3	D2	D1	D0	HEX
Command	0	1	0	1	1	1	0	1	0	1	1	**(Ebh)**
1st parameter	1	1	0	0	0	0	0	0	0	1	0	**(02h)**
2nd parameter	1	1	0	0	0	0	0	0	0	0	1	**(01h)**

Description

High power mode for volatage compensation.

Restriction

Register Availability

Status	Availability
Normal Mode On, Idle Mode Off, Sleep Out	Yes
Normal Mode On, Idle Mode On, Sleep Out	Yes
Partial Mode On, Idle Mode Off, Sleep Out	Yes
Partial Mode On, Idle Mode On, Sleep Out	Yes
Sleep In	Yes

Default

Status	Default Value
	HP[3:0]
Power On Sequence	00h
S/W Reset	00h
H/W Reset	00h

Flow Chart

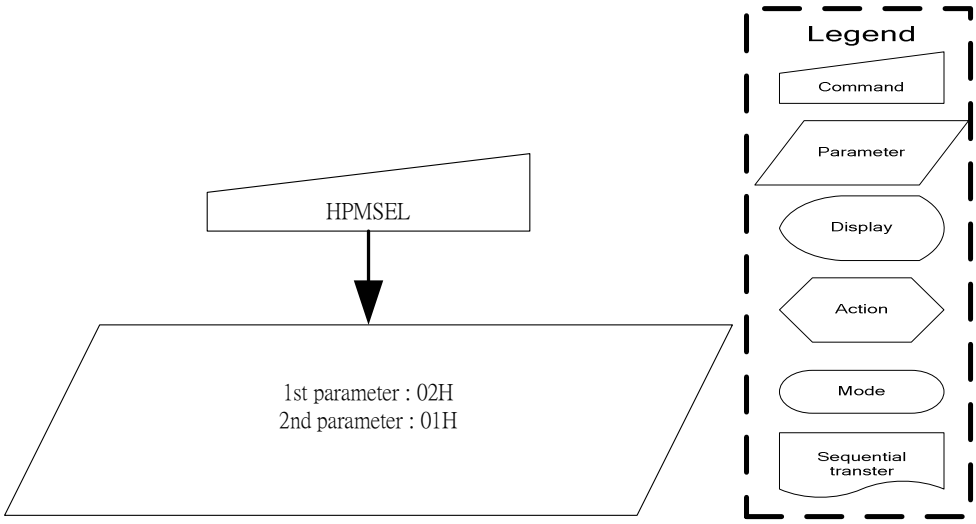

9.1.68. FRMSEL: Frame Freq. in Temperature range (F0H)

	A0	RD	WR	D7	D6	D5	D4	D3	D2	D1	D0	HEX
Command	0	1	0	1	1	1	1	0	0	0	0	**(F0H)**
1st parameter	1	1	0	-	-	-	DIVA	FA3	FA2	FA1	FA0	**Range A**
2nd parameter	1	1	0	-	-	-	DIVB	FB3	FB2	FB1	FB0	**Range B**
3rd parameter	1	1	0	-	-	-	DIVC	FC3	FC2	FC1	FC0	**Range C**
4th parameter	1	1	0	-	-	-	DIVD	FD3	FD2	FD1	FD0	**Range D**

Description

Select Frame Freq. in normal display mode.

1st parameter : Frame freq. value set in temperature range 30(-30℃) to TA

2nd parameter : Frame freq. value set in temperature P range TA to TB

3rd parameter : Frame freq. value set in temperature range TB to TC

4th parameter : Frame freq. value set in temperature range TC to 145(90℃)

For command setting to frame rate value look-up-table, please see the following table:

DIVx	Fx[3:0]	Frame Rate (Hz)
1	0	75
	1	76
	2	77
	3	80
	4	84
	5	88
	6	92
	7	97
	8	102
	9	108
	A	115
	B	123
	C	133
	D	144
	E	155
	F	170
0	0~F	(Frame Rate) / 2

Restriction

Register Availability

Status	Availability
Normal Mode On, Idle Mode Off, Sleep Out	Yes
Normal Mode On, Idle Mode On, Sleep Out	Yes
Partial Mode On, Idle Mode Off, Sleep Out	Yes
Partial Mode On, Idle Mode On, Sleep Out	Yes
Sleep In	Yes

Default

Status	Default Value			
	FA[4:0]	FB[4:0]	FC[4:0]	FD[4:0]
Power On Sequence	06h	0Bh	0Dh	12h
S/W Reset	06h	0Bh	0Dh	12h
H/W Reset	06h	0Bh	0Dh	12h

Flow Chart

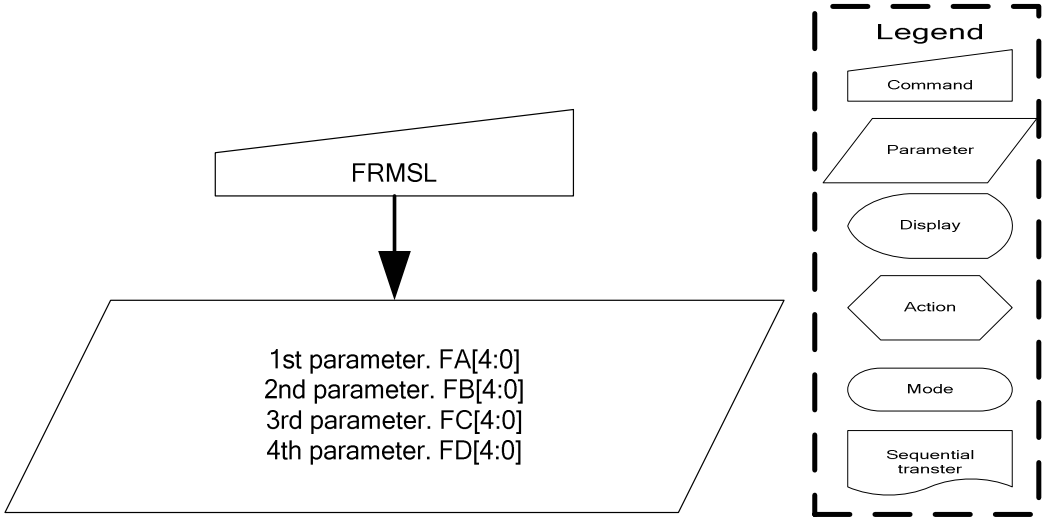

9.1.69. FRM8SEL: Frame Freq. in Temperature range (idle-8 color) (F1H)

	A0	RD	WR	D7	D6	D5	D4	D3	D2	D1	D0	HEX
Command	0	1	0	1	1	1	1	0	0	0	1	**(F1h)**
1st parameter	1	1	0	-	-	-	F8A4	F8A3	F8A2	F8A1	F8A0	**Range A**
2nd parameter	1	1	0	-	-	-	F8B4	F8B3	F8B2	F8B1	F8B0	**Range B**
3rd parameter	1	1	0	-	-	-	F8C4	F8C3	F8C2	F8C1	F8C0	**Range C**
4th parameter	1	1	0	-	-	-	F8D4	F8D3	F8D2	F8D1	F8D0	**Range D**

Description	Select Frame Freq. in normal display mode.(idle;8 color mode) 1st parameter : Frame freq. value set in TEMP range 30(-30℃) to TA 2nd parameter : Frame freq. value set in TEMP range TA to TB 3rd parameter : Frame freq. value set in TEMP range TB to TC 4th parameter : Frame freq. value set in TEMP range TC to 145(90℃)
Restriction	
Register Availability	

Status	Availability
Normal Mode On, Idle Mode Off, Sleep Out	Yes
Normal Mode On, Idle Mode On, Sleep Out	Yes
Partial Mode On, Idle Mode Off, Sleep Out	Yes
Partial Mode On, Idle Mode On, Sleep Out	Yes
Sleep In	Yes

Default

Status	Default Value			
	FA[4:0]	FB[4:0]	FC[4:0]	FD[4:0]
Power On Sequence	06h	0Bh	0Dh	12h
S/W Reset	06h	0Bh	0Dh	12h
H/W Reset	06h	0Bh	0Dh	12h

Flow Chart

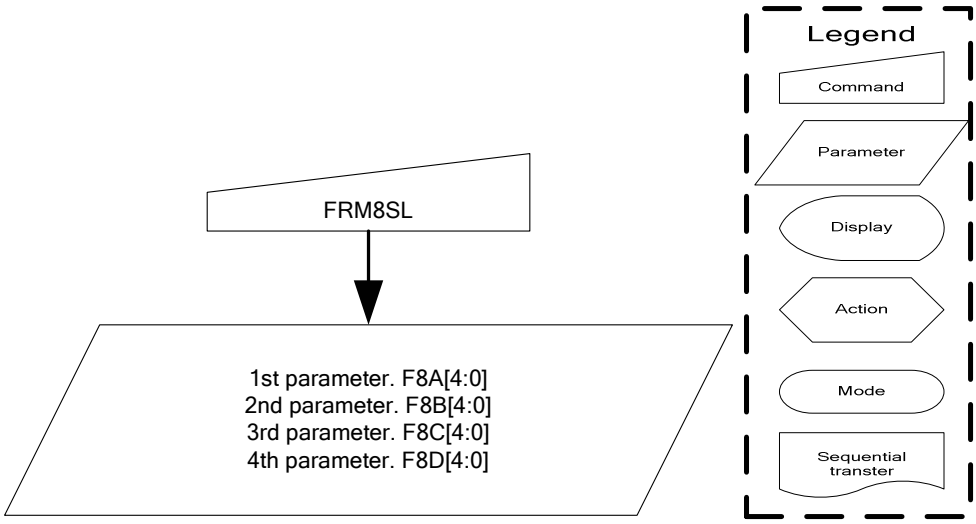
FRM8SL
1st parameter. F8A[4:0]
2nd parameter. F8B[4:0]
3rd parameter. F8C[4:0]
4th parameter. F8D[4:0]
Legend
Command
Parameter
Display
Action
Mode
Sequential transter

9.1.70. TMPRNG: Temp. range set for Frame Freq. Adj. (F2H)

	A0	RD	WR	D7	D6	D5	D4	D3	D2	D1	D0	HEX
Command	0	1	0	1	1	1	1	0	0	1	0	**(F2h)**
1st parameter	1	1	0	-	TA6	TA5	TA4	TA3	TA2	TA1	TA0	**Range A**
2nd parameter	1	1	0	-	TB6	TB5	TB4	TB3	TB2	TB1	TB0	**Range B**
3rd parameter	1	1	0	-	TC6	TC5	TC4	TC3	TC2	TC1	TC0	**Range C**

Description

Temp. range set for automatic frame freq. adj. operation according the current temp. value.

1st parameter: Temp. range A value set

2nd parameter: Temp. range B value set

3rd parameter: Temp. range C value set

TA/TB/TC Temperature(℃) + 40 = TA/TB/TC[6 :0]

Example:

If TA wants to be set at 24℃, TA[6:0]=24+40=64(40h),

Restriction

-40℃≦TA≦TA+TH≦TB≦TB+TH≦TC≦87℃

Register Availability

Status	Availability
Normal Mode On, Idle Mode Off, Sleep Out	Yes
Normal Mode On, Idle Mode On, Sleep Out	Yes
Partial Mode On, Idle Mode Off, Sleep Out	Yes
Partial Mode On, Idle Mode On, Sleep Out	Yes
Sleep In	Yes

Default

Status	Default Value		
	TA[6:0]	TB[6:0]	TC[6:0]
Power On Sequence	1Eh	28h	32h
S/W Reset	1Eh	28h	32h
H/W Reset	1Eh	28h	32h

Flow Chart	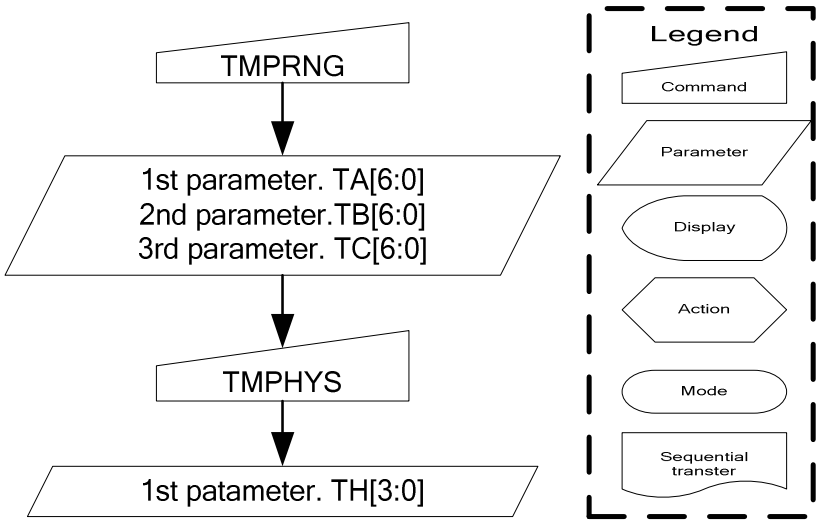

TMPRNG
1st parameter. TA[6:0]
2nd parameter.TB[6:0]
3rd parameter. TC[6:0]
TMPHYS
1st patameter. TH[3:0]
Legend
Command
Parameter
Display
Action
Mode
Sequential transter

9.1.71. TMPHYS: Temp. Hysteresis Set for Frame Freq. Adj. (F3H)

	A0	RD	WR	D7	D6	D5	D4	D3	D2	D1	D0	HEX
Command	0	1	0	1	1	1	1	0	0	1	1	**(F3h)**
1st parameter	1	1	0	-	-	-	-	TH3	TH2	TH1	TH0	

Description

Temp. hysteresis range set for frame freq. adj.

Parameter TH[3:0] is used to set Temp. hysteresis range.

The relationship between temp. state and temp. range value is shown below.

TEMP Range Value	TEMP Rising State	TEMP Falling State
Freq. changing point A	TA[6:0]+TH[3:0]	TA[6:0]
Freq. changing point B	TB[6:0]+TH[3:0]	TB[6:0]
Freq. changing point C	TC[6:0]+TH[3:0]	TC[6:0]

TH Temperature(℃) – 1 = TH[3:0]

Example:

If TH wants to set 5℃, TH[3:0]=5-1=4.

Restriction

Temp. hysteresis value should be smaller than the gap of temp. range.

Register Availability

Status	Availability
Normal Mode On, Idle Mode Off, Sleep Out	Yes
Normal Mode On, Idle Mode On, Sleep Out	Yes
Partial Mode On, Idle Mode Off, Sleep Out	Yes
Partial Mode On, Idle Mode On, Sleep Out	Yes
Sleep In	Yes

Default

Status	Default Value(TH[3:0])
Power On Sequence	04h
S/W Reset	04h
H/W Reset	04h

Flow Chart	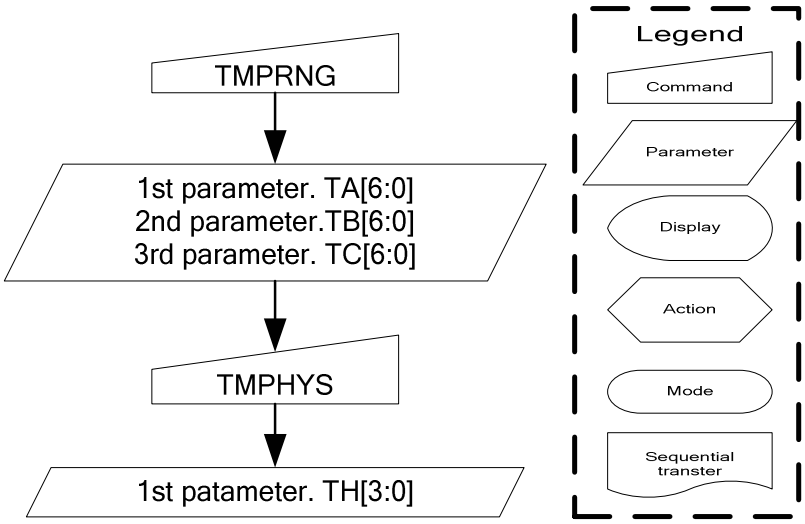

TMPRNG
1st parameter. TA[6:0]
2nd parameter.TB[6:0]
3rd parameter. TC[6:0]
TMPHYS
1st patameter. TH[3:0]
Legend
Command
Parameter
Display
Action
Mode
Sequential transter

9.1.72. TEMPSEL: Temperature Gradient Compensation Coefficient Set (F4H)

Command	*A0*	*/RD*	*/WR*	*D7*	*D6*	*D5*	*D4*	*D3*	*D2*	*D1*	*D0*	*Hex*
TEMPSEL	0	1	0	1	1	1	1	0	1	0	0	**(F4h)**
1st parameter	1	1	0	MT13	MT12	MT11	MT10	MT03	MT02	MT01	MT00	MT1x: (-24 °C to -32 °C) MT0x: (-32 °C to -40 °C)
2nd parameter	1	1	0	MT33	MT32	MT31	MT30	MT23	MT22	MT21	MT20	MT3x: (-8 °C to -16 °C) MT2x: (-16 °C to -24 °C)
3rd parameter	1	1	0	MT53	MT52	MT51	MT50	MT43	MT42	MT41	MT40	MT5x: (8 °C to 0 °C) MT4x: (0 °C to -8 °C)
4th parameter	1	1	0	MT73	MT72	MT71	MT70	MT63	MT62	MT61	MT60	MT7x: (24 °C to16 °C) MT6x: (16 °C to 8 °C)
5th parameter	1	1	0	MT93	MT92	MT91	MT90	MT83	MT82	MT81	MT80	MT9x: (40 °C to 32 °C) MT8x: (32 °C to 24 °C)
6th parameter	1	1	0	MTB3	MTB2	MTB1	MTB0	MTA3	MTA2	MTA1	MTA0	MTBx: (56 °C to 48 °C) MTAx: (48 °C to 40 °C)
7th parameter	1	1	0	MTD3	MTD2	MTD1	MTD0	MTC3	MTC2	MTC1	MTC0	MTDx: (72 °C to 64 °C) MTCx: (64 °C to 56 °C)
8th parameter	1	1	0	MTF3	MTF2	MTF1	MTF0	MTE3	MTE2	MTE1	MTE0	MTFx: (87 °C to 80 °C) MTEx: (80 °C to 72 °C)

NOTE: "-" Don't care

Description

This command defines temperature gradient compensation coefficient. For this command detail description and opearation, please see Section 7.11.

Parameter n	**MT n 3**	**MT n 2**	**MT n 1**	**MT n 0**	**Voltage / °C**
0	**0**	**0**	**0**	**0**	**+5 mv / °C**
1	**0**	**0**	**0**	**1**	**0 mv / °C**
2	**0**	**0**	**1**	**0**	**-5 mv / °C**
3	**0**	**0**	**1**	**1**	**-10 mv / °C**
: **:** **:**	**:** **:** **:**	**:** **:** **:**	**:** **:** **:**	**:** **:** **:**	**:** **:** **:**
12	**1**	**1**	**0**	**0**	**-55 mv / °C**
13	**1**	**1**	**0**	**1**	**-60 mv / °C**
14	**1**	**1**	**1**	**0**	**-65 mv / °C**
15	**1**	**1**	**1**	**1**	**-70 mv / °C**

Voltage / °C (+/- 3mv tolerance)

Restriction

Pleasse refer to the specification in absolute maximum ratings for operating voltage range.

Register Availability

Status	Availability
Normal Mode On, Idle Mode Off, Sleep Out	Yes
Normal Mode On, Idle Mode On, Sleep Out	Yes
Partial Mode On, Idle Mode Off, Sleep Out	Yes
Partial Mode On, Idle Mode On, Sleep Out	Yes
Sleep In	Yes

Default

Status	Default Value (MTn[3:0])
Power On Sequence	1st parameter 0xFF
S/W Reset	2nd parameter 0x36
H/W Reset	3rd parameter 0x04
	4th parameter 0x00
	5th parameter 0x33
	6th parameter 0x42
	7th parameter 0xC4
	8th parameter 0x59

Flow Chart

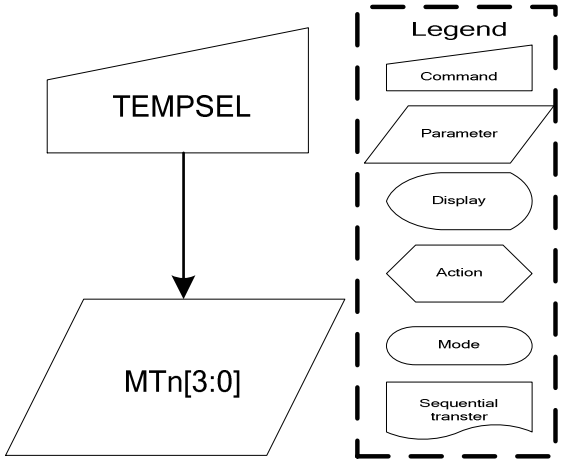

9.1.73. THYS : Temperature detection threshold(F7H)

Command	*A0*	*/RD*	*/WR*	*D7*	*D6*	*D5*	*D4*	*D3*	*D2*	*D1*	*D0*	*Hex*
THYS	0	1	0	1	1	1	1	0	1	1	1	**(F7h)**
Parameter	1	1	0	THYS7	THYS6	THYS5	THYS4	THYS3	THYS2	THYS1	THYS0	**-**

NOTE: "-" Don't care

Description	Temperature detection threshold setting.
Restriction	

Register Availability

Status	Availability
Normal Mode On, Idle Mode Off, Sleep Out	Yes
Normal Mode On, Idle Mode On, Sleep Out	Yes
Partial Mode On, Idle Mode Off, Sleep Out	Yes
Partial Mode On, Idle Mode On, Sleep Out	Yes
Sleep In	Yes

Default

Status	Default Value D[7:0]
Power On Sequence	06h
S/W Reset	06h
H/W Reset	06h

Flow Chart

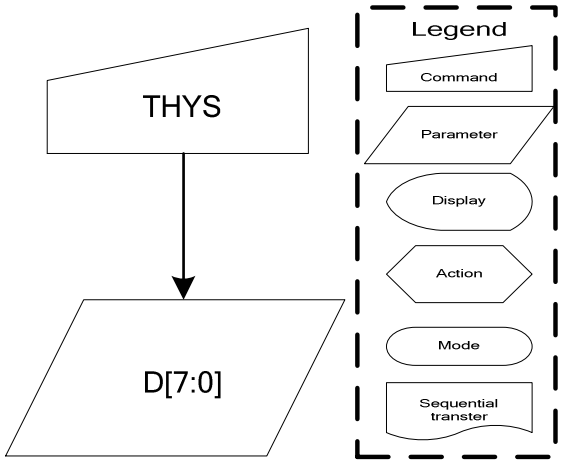

9.1.74. Frame Set: Frame PWM Set (F9H)

Command	*A0*	*/RD*	*/WR*	*D7*	*D6*	*D5*	*D4*	*D3*	*D2*	*D1*	*D0*	*Hex*
Frame1 Set	0	1	0	1	1	1	1	1	0	0	1	**(F9h)**
1st parameter	1	1	0	-	-	-	P14	P13	P12	P11	P10	-
2nd parameter	1	1	0	-	-	-	P24	P23	P22	P21	P20	-
:	:	:	:	:	:	:	:	:	:	:	:	-
15th parameter	1	1	0	-	-	-	P154	P153	P152	P151	P150	-
16th parameter	1	1	0	-	-	-	P164	P163	P162	P161	P160	-

NOTE: "-" Don't care

Description	This command is used to set frame PWM.
Restriction	

Register Availability

Status	Availability
Normal Mode On, Idle Mode Off, Sleep Out	Yes
Normal Mode On, Idle Mode On, Sleep Out	Yes
Partial Mode On, Idle Mode Off, Sleep Out	Yes
Partial Mode On, Idle Mode On, Sleep Out	Yes
Sleep In	Yes

Default

Status	Default Value
Power On Sequence	--
S/W Reset	--
H/W Reset	--

Flow Chart

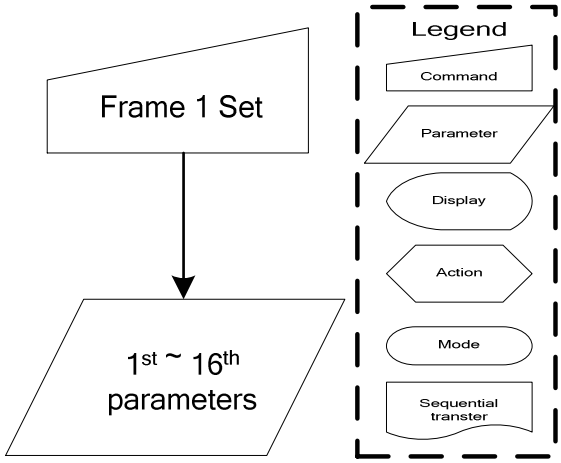

NOTE:

The default value of RGB level set

RGB level0	00
RGB level1	01
RGB level2	02
RGB level3	04
RGB level4	06
RGB level5	07
RGB level6	09
RGB level7	0A
RGB level8	0B
RGB level9	0C
RGB level10	0D
RGB level11	0F
RGB level12	11
RGB level13	12
RGB level14	17
RGB level15	1A

All the modulation range of each level for each frame is from 00’H to 1F’H.

10. SPECIFICATIONS

10.1 ABSOLUTE MAXIMUM RATINGS

(VSS = 0V)

Item	Symbol	Value	Unit
Supply voltage 1	V_{DD},V_{DD1}	- 0.3 ~ + 3.0	V
Supply voltage 2	V_{DD2},V_{DD3},V_{DD4},V_{DD5}	- 0.3 ~ + 4.2	V
Supply voltage 3	V_{MAX} (V0- XV0)	- 0.3 ~ + 18.0	V
Input voltage range	V_{IN}	- 0.3 ~ V_{DD} + 0.3	V
Operating temperature range	T_{OPR}	- 30 ~ + 85	℃
Storage temperature range	T_{STG}	- 40 ~ + 125	℃

NOTE:

(1). Voltages are all based on VSS = 0V.

(2). Voltage relationship: V0≧Vg≧Vm≧VSS≧XV0 must always be satisfied.

10.2 DC CHARACTERISTICS

10.2.1. Basic Characteristics

(V_{SS}=0V,Ta = -30 to 85℃)

Parameter	Symbol	Conditions	Related Pins	MIN	TYP	MAX	Unit
Logic Operating voltage	V_{DDI}	-	*2)VDD,VDD1	1.65	1.8	3.0	V
Analog Operating voltage	V_{DDA}	-	*2)VDD2,3,4,5	2.4	2.75	3.3	
Driving voltage input	V_{LCD}	V0 – XV0	*3)V0, XV0	-	-	18.0	
High level input voltage	V_{IH}		*1) *2)	0.7V_{DD}	-	V_{DD}	
Low level input voltage	V_{IL}	-	*1) *2)	V_{SS}	-	0.3V_{DD}	
High level output voltage	V_{OH}	I_{OH} = -1.0mA	*2) SI, TE	0.8V_{DD}	-	V_{DD}	
Low level output voltage	V_{OL}	I_{OL} = +1.0mA		V_{SS}	-	0.2V_{DD}	
Input leakage current	I_{IL}	V_{IN} = V_{DD} or V_{SS}	*1) *2)	-1.0	-	+1.0	μA
Driver on resistance (SEG)	R_{ONSEG}	Vg = 2.8V, Ta=25℃	S0 to S395	-	-	1	KΩ
Driver on resistance (COM)	R_{ONCOM}	Vg = 2.8V, Ta=25℃	C0 to C131	-	-	1	
Frame rate	FR	Ta=25℃, N-line=0x00, Duty=128,	-	-	77	-	Hz
Voltage follower output voltage	Vm		Vm	0.7	Vg/2	VDDA-0.7	V
Booster2 output voltage range	Vg		Vg	1.8	-	5	V

NOTE:

**1) Applies to IF1, IF2, IF3, /CS, /RST, /WR, /RD, A0(SCL) and D15-D2, D1 (A0) ,D0(SI) pins*

**2) *3) When the measurements are performed with LCD module, Measurement Points are like below.*

**4) Vdda cannot be higher than 3V while Vddi<1.7V.*

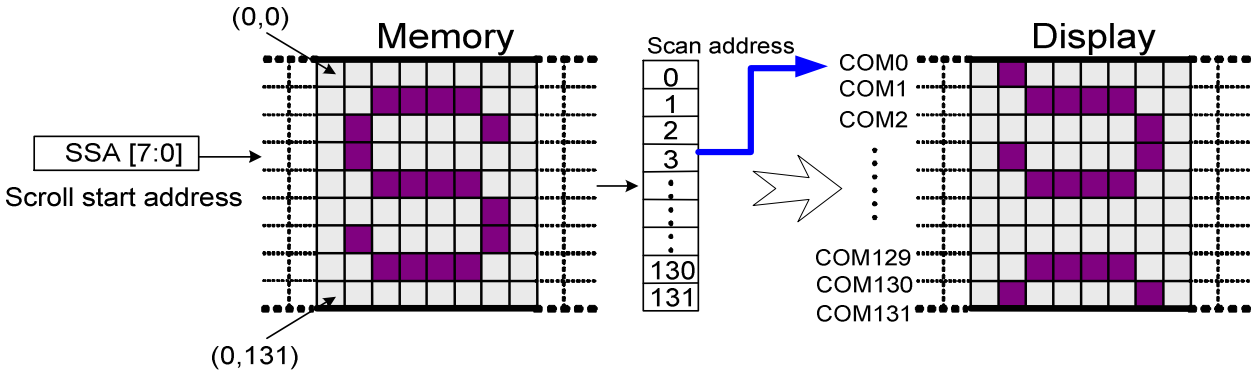

10.2.2. Current Consumption

Operation mode	Condition	Current consumption	
		Typical	Maximum
		IDD (mA)	IDD (mA)
- Normal Mode	1. 1/2 gray pattern 2. Vddi=1.8V, Vdda=2.8V 2. Vop=12V, bias=1/9. N=0x00, FR=77Hz, x8 booster, Ta=25℃	0.6	0.9
- Sleep In Mode	Vddi=1.8V, Vdda=2.8V, Ta=25℃	0.01	0.018

Note:
The Current Consumption is DC characteristics.

11. TIMING CHARACTERISTICS

11.1 Parallel Interface Characteristics bus (8080-series MCU)

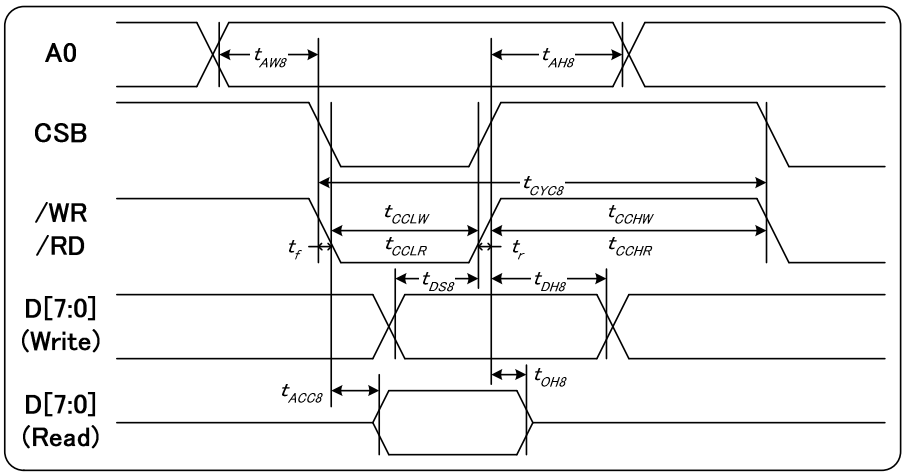

(V_{DD}=2.8V, Ta= 25℃, die)

Item	Signal	Symbol	Condition	Rating		Units
				Min.	Max.	
Address hold time	A0	tAH8		15	—	ns
Address setup time		tAW8		15	—	
System cycle time (WRITE)	WR	tCYC8		170	—	
/WR L pulse width (WRITE)		tCCLW		50	—	ns
/WR H pulse width (WRITE)		tCCHW		100	—	
System cycle time (READ)	RD (ID)	tCYC8	When read ID data	60	—	
/RD L pulse width (READ)		tCCLR		40	—	
/RD H pulse width (READ)		tCCHR		20	—	
System cycle time (READ)	RD (FM)	tCYC8	When read from frame memory	350	—	
/RD L pulse width (READ)		tCCLR		100	—	
/RD H pulse width (READ)		tCCHR		250	—	
WRITE data setup time	D0 to D7	tDS8		50	—	
WRITE data hold time		tDH8		10	—	
READ access time (ID)		tACC8 (ID)		—	50	
READ access time (FM)		tACC8 (FM)	CL = 30 pF	—	70	
READ Output disable time		tOH8	CL = 30 pF	—	60	

(V_{DD}=1.8V, Ta= 25℃, die)

Item	Signal	Symbol	Condition	Rating		Units
				Min.	Max.	
Address hold time	A0	tAH8		15	—	ns
Address setup time		tAW8		15	—	
System cycle time (WRITE)	WR	tCYC8		260	—	
/WR L pulse width (WRITE)		tCCLW		80	—	ns
/WR H pulse width (WRITE)		tCCHW		170	—	
System cycle time (READ)	RD (ID)	tCYC8	When read ID data	110	—	
/RD L pulse width (READ)		tCCLR		70	—	
/RD H pulse width (READ)		tCCHR		25	—	
System cycle time (READ)	RD (FM)	tCYC8	When read from frame memory	450	—	
/RD L pulse width (READ)		tCCLR		140	—	
/RD H pulse width (READ)		tCCHR		300	—	
WRITE data setup time	D0 to D7	tDS8		60	—	
WRITE data hold time		tDH8		10	—	
READ access time (ID)		tACC8 (ID)		—	60	
READ access time (FM)		tACC8 (FM)	CL = 30 pF	—	90	
READ Output disable time		tOH8	CL = 30 pF	—	80	

*1 The input signal rise time and fall time (tr, tf) is specified at 15 ns or less. When the system cycle time is extremely fast, (tr +tf) ≦ (tCYC8 – tCCLW – tCCHW) for (tr + tf) ≦ (tCYC8 – tCCLR – tCCHR) are specified.

*2 All timing is specified using 20% and 80% of VDD as the reference.

*3 tCCLW and tCCLR are specified as the overlap between /CS being “L” and WR and RD being at the “L” level.

11.2 Parallel Interface Characteristics bus (6800-series MCU)

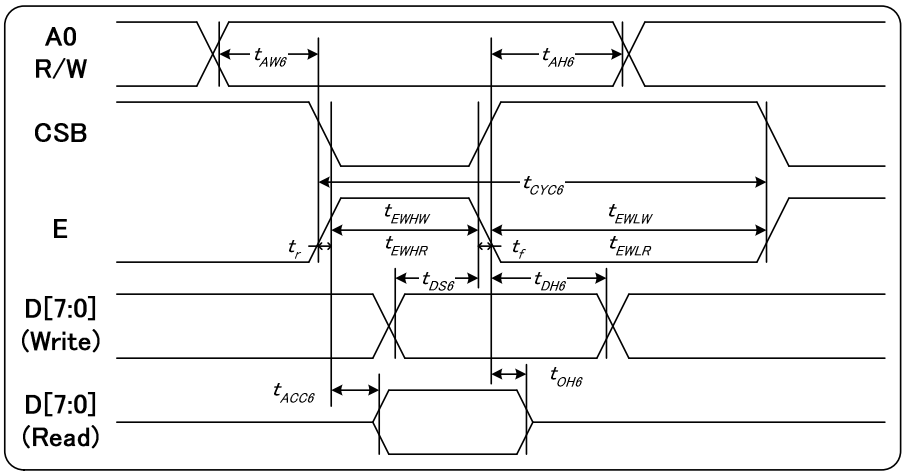

(V_{DD}=2.8V, Ta= 25℃, die)

Item	Signal	Symbol	Condition	Rating		Units
				Min.	Max.	
Address hold time	A0	tAH8		10	—	ns
Address setup time		tAW8		10	—	
System cycle time (WRITE)	E	tCYC8		130	—	
/WR L pulse width (WRITE)		tCCLW		85	—	ns
/WR H pulse width (WRITE)		tCCHW		45	—	
System cycle time (READ)	RD (ID)	tCYC8	When read ID data	65	—	
/RD L pulse width (READ)		tCCLR		15	—	
/RD H pulse width (READ)		tCCHR		35	—	
System cycle time (READ)	RD (FM)	tCYC8	When read from frame memory	250	—	
/RD L pulse width (READ)		tCCLR		130	—	
/RD H pulse width (READ)		tCCHR		120	—	
WRITE data setup time	D0 to D7	tDS8		50	—	
WRITE data hold time		tDH8		10	—	
READ access time (ID)		tACC8 (ID)		—	70	
READ access time (FM)		tACC8 (FM)	CL = 30 pF	—	70	
READ Output disable time		tOH8	CL = 30 pF	—	60	

(V_{DD}=1.8V, Ta= 25℃, die)

Item	Signal	Symbol	Condition	Rating		Units
				Min.	Max.	
Address hold time	A0	tAH8		10	—	ns
Address setup time		tAW8		10	—	
System cycle time (WRITE)	E	tCYC8		210	—	
/WR L pulse width (WRITE)		tCCLW		150	—	ns
/WR H pulse width (WRITE)		tCCHW		60	—	
System cycle time (READ)	RD (ID)	tCYC8	When read ID data	110	—	
/RD L pulse width (READ)		tCCLR		25	—	
/RD H pulse width (READ)		tCCHR		70	—	
System cycle time (READ)	RD (FM)	tCYC8	When read from frame memory	400	—	
/RD L pulse width (READ)		tCCLR		200	—	
/RD H pulse width (READ)		tCCHR		200	—	
WRITE data setup time	D0 to D7	tDS8		60	—	
WRITE data hold time		tDH8		10	—	
READ access time (ID)		tACC8 (ID)			60	
READ access time (FM)		tACC8 (FM)	CL = 30 pF	—	90	
READ Output disable time		tOH8	CL = 30 pF	—	80	

*1 The input signal rise time and fall time (tr, tf) is specified at 15 ns or less. When the system cycle time is extremely fast, (tr +tf) ≦ (tCYC6 – tEWLW – tEWHW) for (tr + tf) ≦ (tCYC6 – tEWLR – tEWHR) are specified.

*2 All timing is specified using 20% and 80% of VDD as the reference.

*3 tEWLW and tEWLR are specified as the overlap between /CS being “L” and E.

11.3 Serial Interface Characteristics (4-pin Serial)

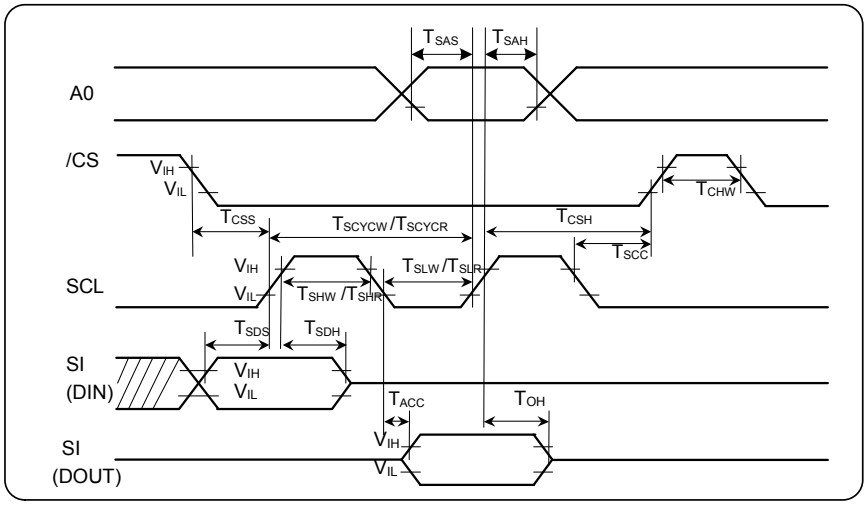

(V_{DD}=2.8V, Ta= 25℃, die)

Item	Signal	Symbol	Condition	Rating		Units
				Min.	Max.	
Serial clock period (write)	SCL	tSCYCW		60	—	ns
SCL “H” pulse width (write)		tSHW		30	—	
SCL “L” pulse width (write)		tSLW		30	—	
Serial clock period (read)		tSCYCR		130	—	
SCL “H” pulse width (read)		tSHR		65	—	
SCL “L” pulse width (read)		tSLR		65	—	
Address setup time	A0	tSAS		10	—	
Address hold time		tSAH		20	—	
Data setup time	SI	tSDS		10	—	
Data hold time		tSDH		20	—	
Data access time		tACC	CL=30pF	—	50	
Output disable time		tOH	CL=30pF	—	50	
Chip select setup time	/CS	tCSS		30	—	
Chip select hold time		tCSH		30	—	
Chip select "H" pulse width		tCHW		0	—	

(V_{DD}=1.8V, Ta= 25℃, die)

Item	Signal	Symbol	Condition	Rating		Units
				Min.	Max.	
Serial clock period (write)	SCL	tSCYCW		70	—	ns
SCL “H” pulse width (write)		tSHW		35	—	
SCL “L” pulse width (write)		tSLW		35	—	
Serial clock period (read)		tSCYCR		150	—	
SCL “H” pulse width (read)		tSHR		70	—	
SCL “L” pulse width (read)		tSLR		70	—	
Address setup time	A0	tSAS		10	—	
Address hold time		tSAH		25	—	
Data setup time	SI	tSDS		10	—	
Data hold time		tSDH		25	—	
Data access time		tACC	CL=30pF	—	60	
Output disable time		tOH	CL=30pF	—	60	
Chip select setup time	/CS	tCSS		35	—	
Chip select hold time		tCSH		35	—	
Chip select "H" pulse width		tCHW		0	—	

*1 The input signal rise and fall time (tr, tf) are specified at 15 ns or less.

*2 All timing is specified using 20% and 80% of VDD as the standard.

11.4 Serial Interface Characteristics (3-pin Serial)

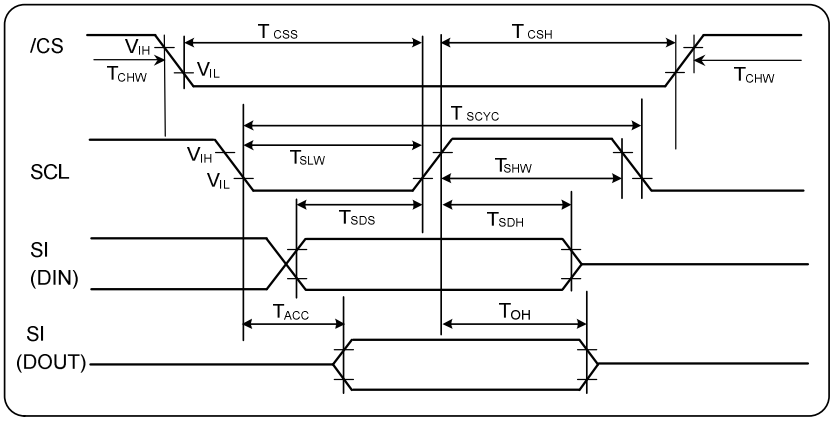

(V_{DD}=2.8V, Ta= 25℃, die)

Item	Signal	Symbol	Condition	Rating		Units
				Min.	Max.	
Serial clock period (write)	SCL	tSCYC		60	—	ns
SCL “H” pulse width (write)		tSHW		30	—	
SCL “L” pulse width (write)		tSLW		30	—	
Serial clock period (read)		tSCYC		130	—	
SCL “H” pulse width (read)		tSHW		65	—	
SCL “L” pulse width (read)		tSLW		65	—	
Data setup time	SI	tSDS		10	—	
Data hold time		tSDH		20	—	
Data access time		tACC	CL=30pF	—	50	
Output disable time		tOH	CL=30pF	—	50	
Chip select setup time	/CS	tCSS		30	—	
Chip select hold time		tCSH		30	—	
Chip select "H" pulse width		tCHW		0	—	

(V_{DD}=1.8V, Ta= 25℃, die)

Item	Signal	Symbol	Condition	Rating		Units
				Min.	Max.	
Serial clock period (write)	SCL	tSCYC		70	—	ns
SCL “H” pulse width (write)		tSHW		35	—	
SCL “L” pulse width (write)		tSLW		35	—	
Serial clock period (read)		tSCYC		150	—	
SCL “H” pulse width (read)		tSHW		70	—	
SCL “L” pulse width (read)		tSLW		70	—	
Data setup time	SI	tSDS		10	—	
Data hold time		tSDH		25	—	
Data access time		tACC	CL=30pF	—	60	
Output disable time		tOH	CL=30pF	—	60	
Chip select setup time	/CS	tCSS		35	—	
Chip select hold time		tCSH		35	—	
Chip select "H" pulse width		tCHW		0	—	

*1 The input signal rise and fall time (tr, tf) are specified at 15 ns or less.

*2 All timing is specified using 20% and 80% of VDD as the standard.

11.5 Ouput access/disable timing measurement method

◆ Parallel interface (8080-series)

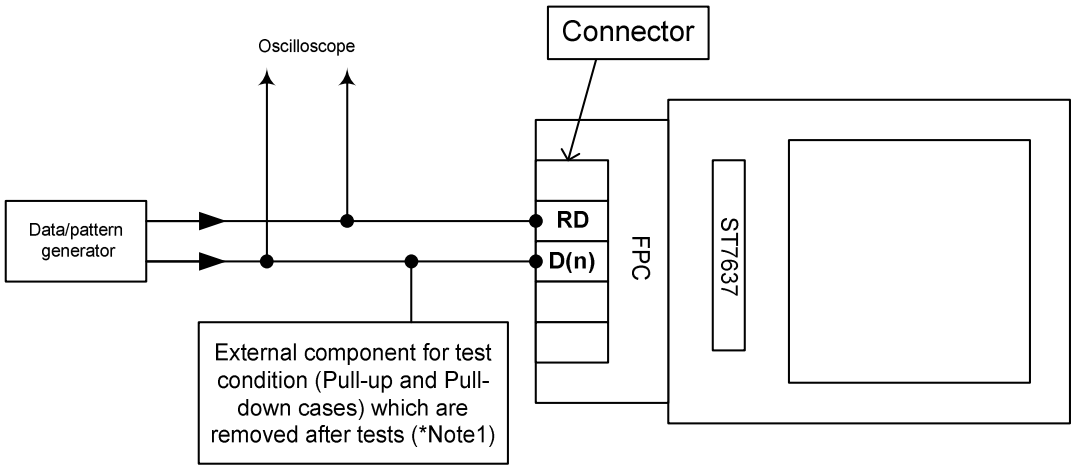

◆ Serial interface (3-line)

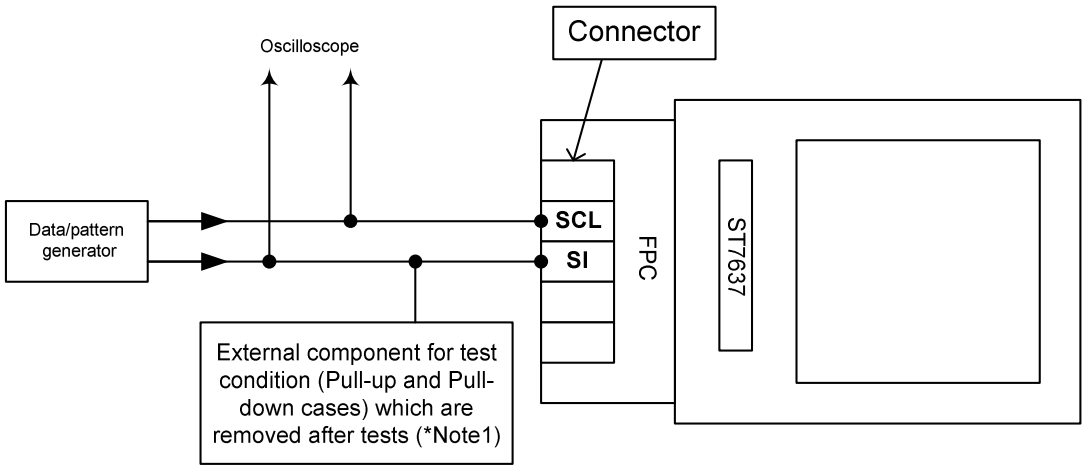

Note:

1. pull-up/pull-down resistor: ***3KΩ ± 5% ;*** *pull-up/pull-down capacitor:* ***8 or 30 pF ± 10%***

2. Capacitances and resistances of the oscilloscope's probe must be included externals components in these measurements.

11.5.1.1. Minimum value measurement

◆ Parallel interface (8080-series)

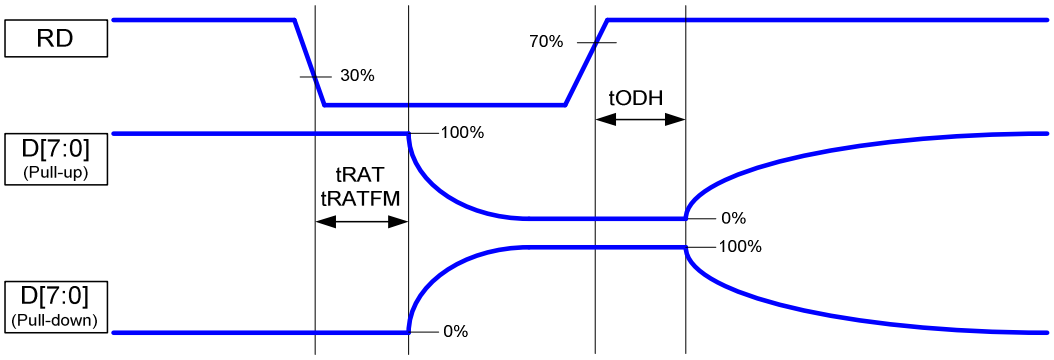

◆ Serial interface (3-line)

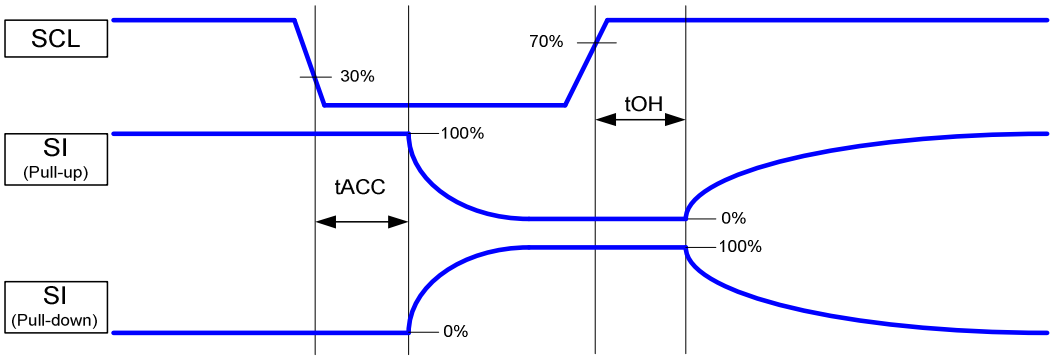

Measurement circuit pull down	Measurement circuit pull up
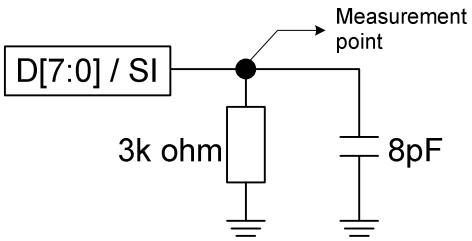	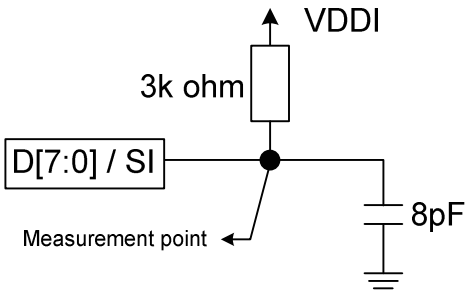

11.5.1.2. Maximum value measurement

◆ Parallel interface (8080-series)

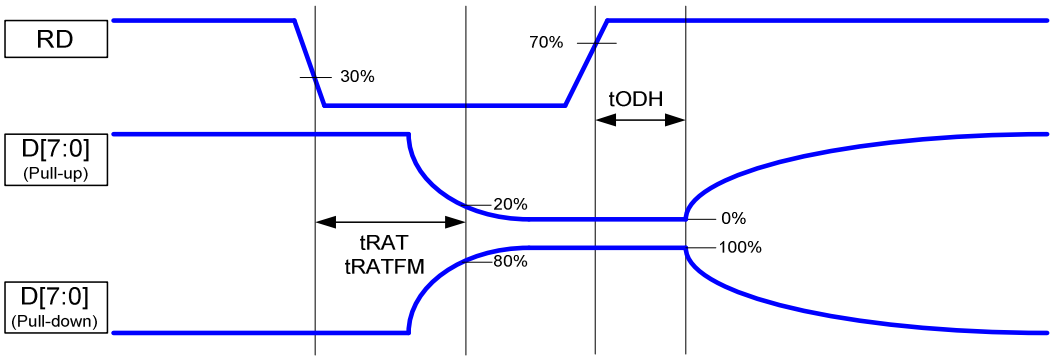

◆ Serial interface (3-line)

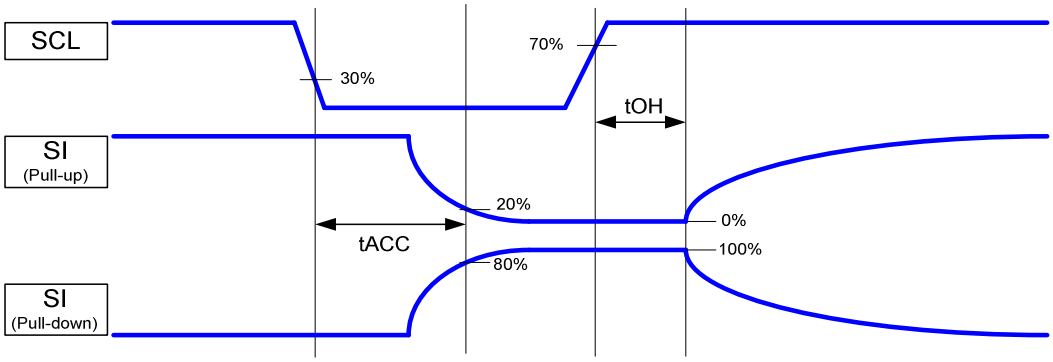

Measurement circuit pull down	Measurement circuit pull up
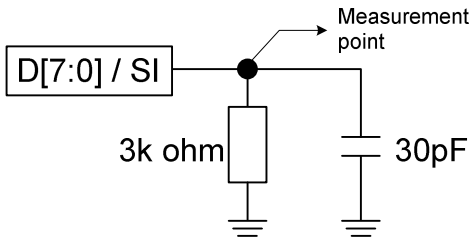	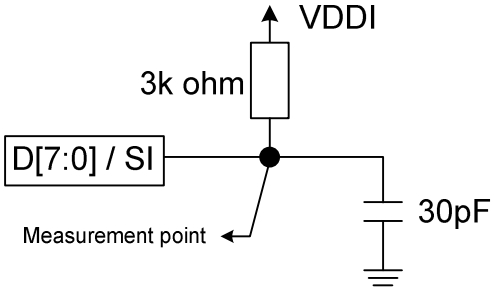

12. RESET TIMING

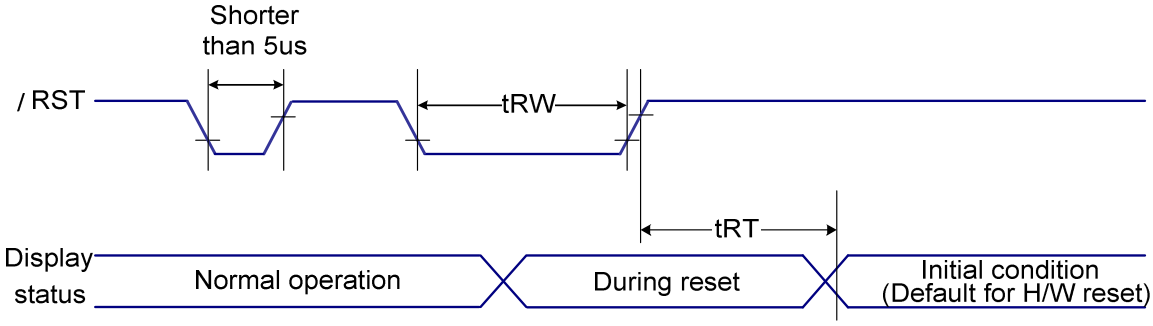

(VDD=2.8V, Ta = 25℃)

Item	Signal	Symbol	Condition	Rating		Units
				Min.	Max.	
Reset “L” pulse width	/RST	tRW		10	—	us
Reset time		tRT		—	5 (*note 5)	ms
				—	120 (*note 6,7)	ms

(VDD=1.8V, Ta = 25℃)

Item	Signal	Symbol	Condition	Rating		Units
				Min.	Max.	
Reset “L” pulse width	/RST	tRW		10	—	us
Reset time		tRT		—	5 (*note 5)	ms
				—	120 (*note 6,7)	ms

Notes:

1. The reset cancel includes also required time for loading ID bytes, VCOM setting and other settings from EEPROM (or similar device) to registers. This loading is done every time when there is HW reset cancel time (tRT) within 5 ms after a rising edge of RST

2. Spike due to an electrostatic discharge on RST line does not cause irregular system reset according to the table below:

RST Pulse	Action
Shorter than 5μs	Reset Rejected
Longer than 9μs	Reset
Between 5μs and 9μs	Reset starts

3. During the Resetting period, the display will be blanked (The display is entering blanking sequence, which maximum time is 120 ms, when Reset Starts in Sleep Out –mode. The display remains the blank state in Sleep In –mode.) and then return to Default condition for Hardware Reset.

4. Spike Rejection also applies during a valid reset pulse as shown below:

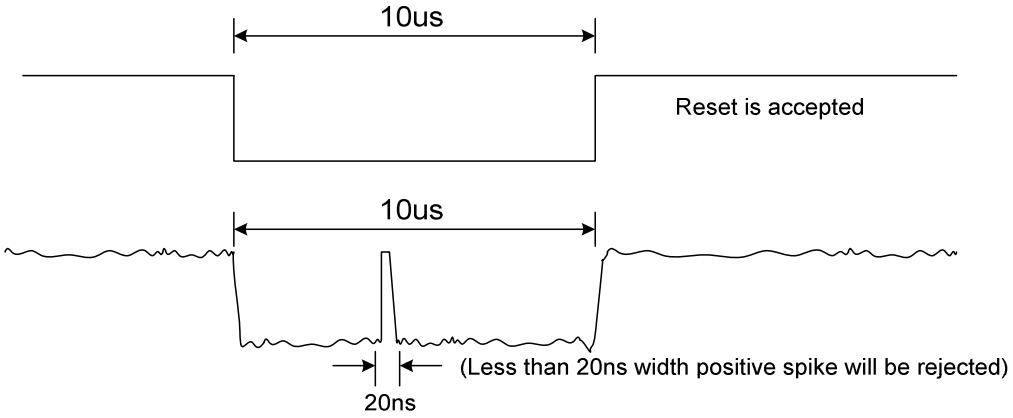

5. When Reset applied during Sleep In Mode.

6. When Reset applied during Sleep Out Mode.

7. It is necessary to wait 5msec after releasing RST before sending commands. Also Sleep Out command cannot be sent for 120msec.

13. THE MPU INTERFACE (REFERENCE EXAMPLES)

The ST7637 Series can be connected to either 8080 Series MPUs or to 6800 Series MPUs. Moreover, using the serial interface it is possible to operate the ST7637 series chips with fewer signal lines.

The display area can be enlarged by using multiple ST7637 Series chips. When this is done, the chip select signal can be used to select the individual Ics to access.

(1) 8080 Series MPUs

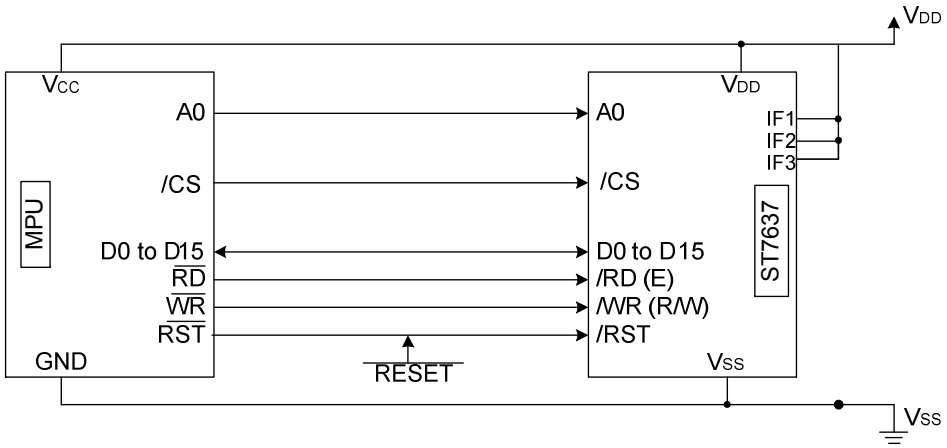

(2) 6800 Series MPUs

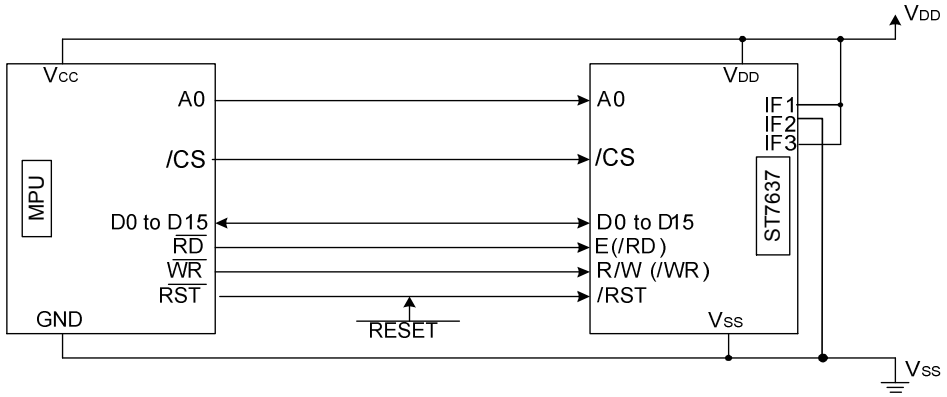

(3) Using the Serial Interface (4-line interface)

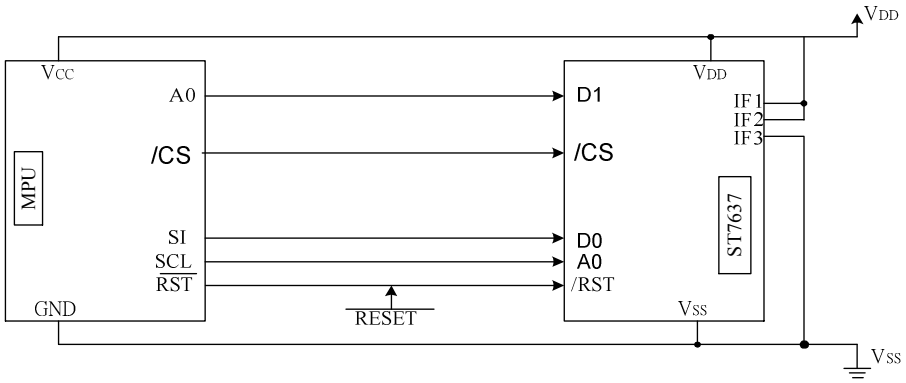

(4) Using the Serial Interface (3-line interface)

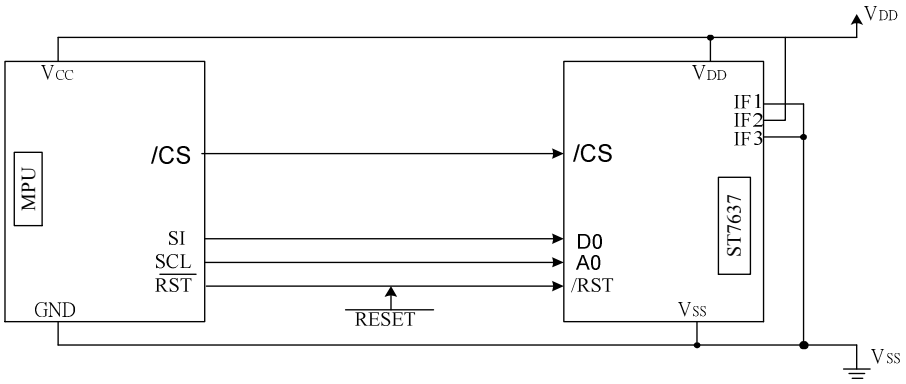

A – Application Note

A1a – 80 series 8-bit parallel interlace Mode

IF[3:1]	HHL
CLS	H (internal OSC)
CSEL	H
C1	1uF/16V
C2	1uF/25V
C3	1uF/16V

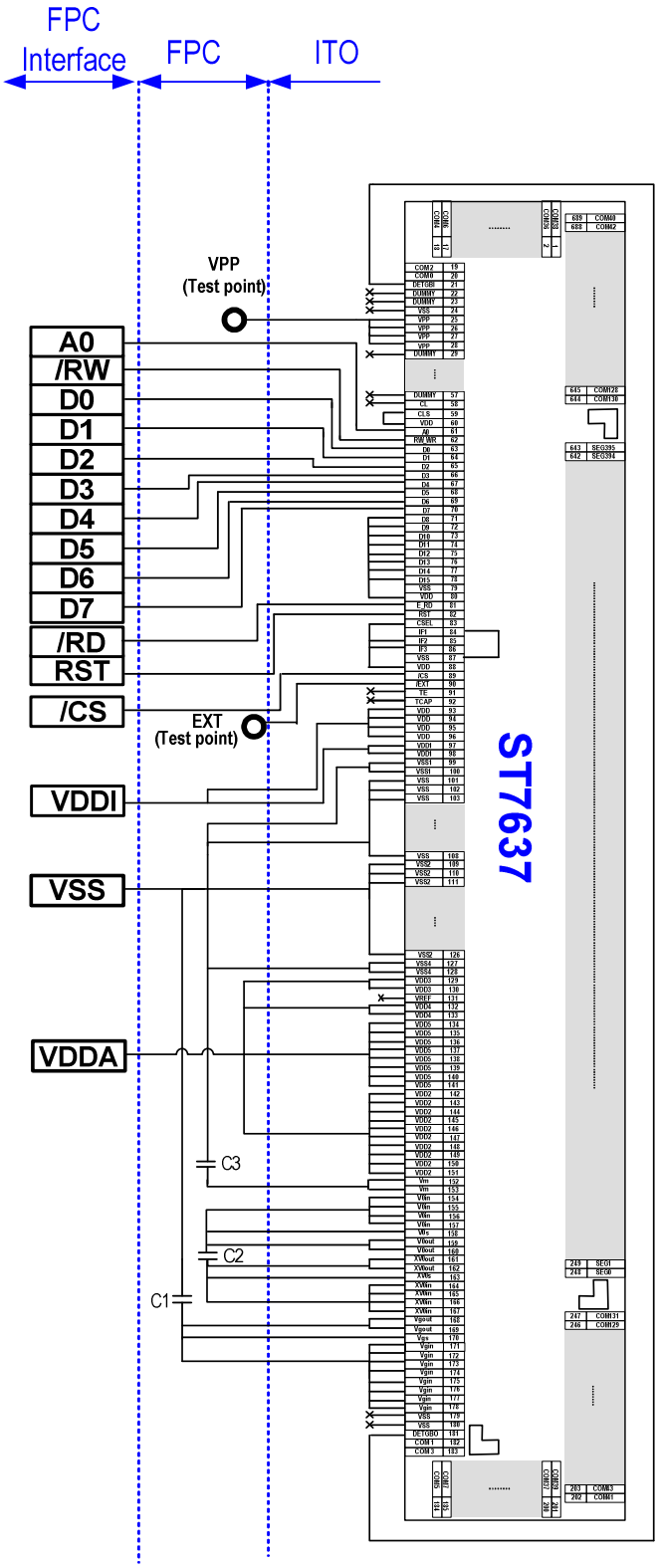

A1b – 80 series 16-bit parallel interlace Mode

IF[3:1]	HHH
CLS	H (internal OSC)
CSEL	H
C1	1uF/16V
C2	1uF/25V
C3	1uF/16V

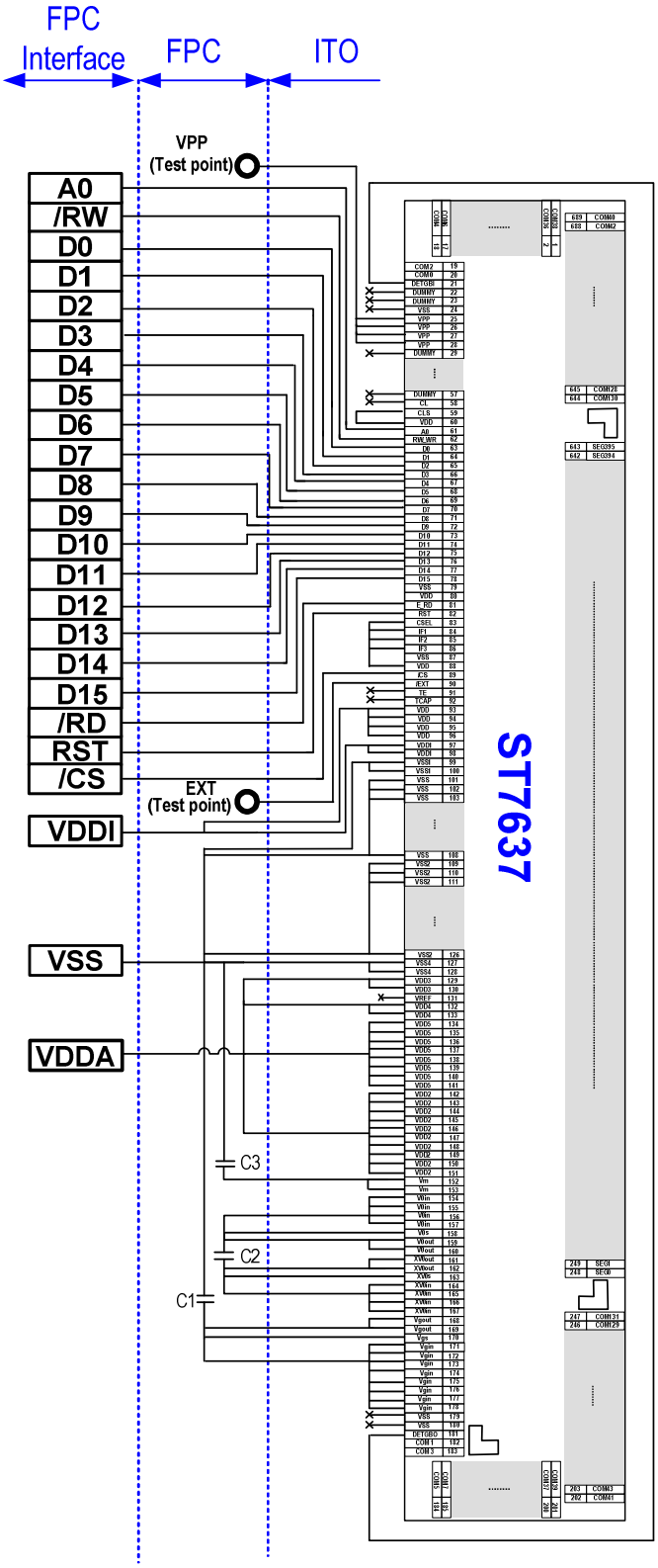

A1c – 68 series 8-bit parallel interlace Mode

F[3:1]	HLL
CLS	H (internal OSC)
CSEL	H
C1	1uF/16V
C2	1uF/25V
C3	1uF/16V

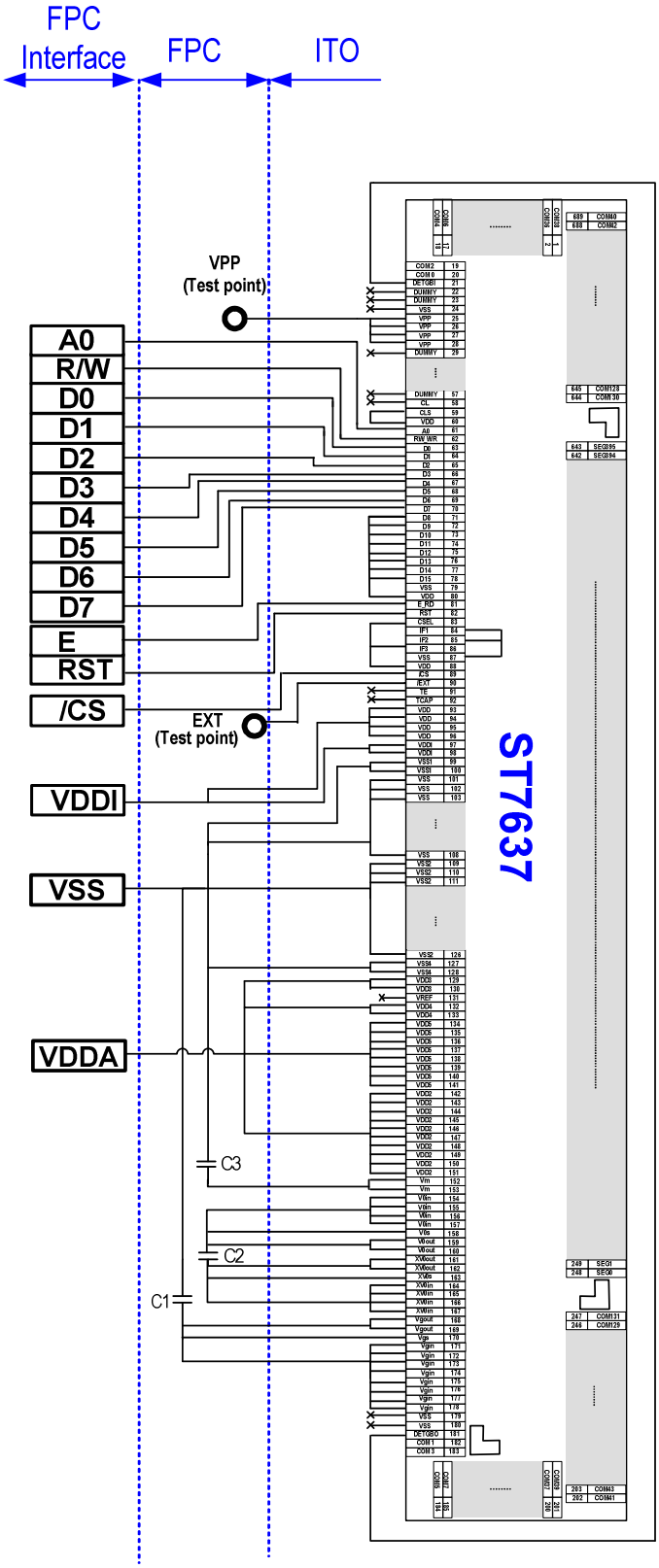

A1d – 68 series 16-bit parallel interlace Mode

IF[3:1]	HLH
CLS	H (internal OSC)
CSEL	H
C1	1uF/16V
C2	1uF/25V
C3	1uF/16V

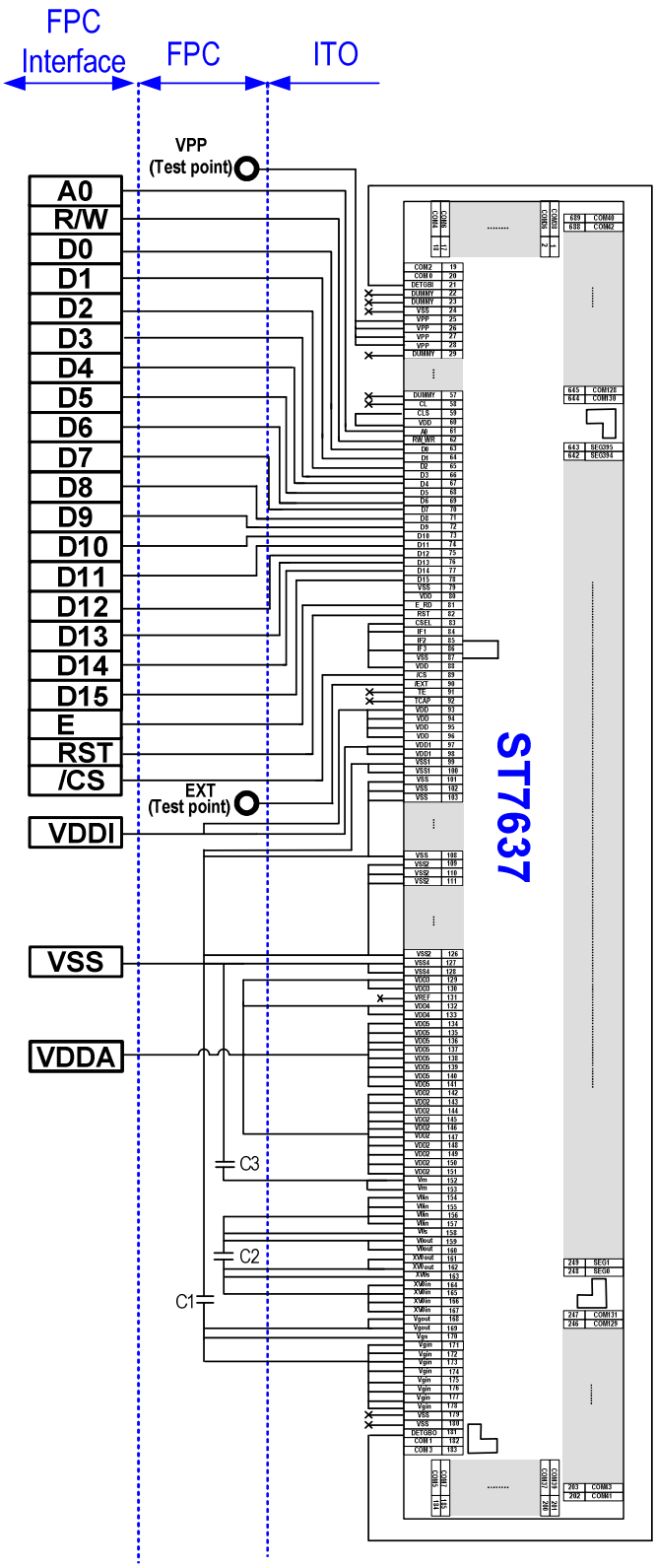

A1e – 4-line serial interlace Mode

IF[3:1]	LHH
CLS	H (internal OSC)
CSEL	H
C1	1uF/16V
C2	1uF/25V
C3	1uF/16V

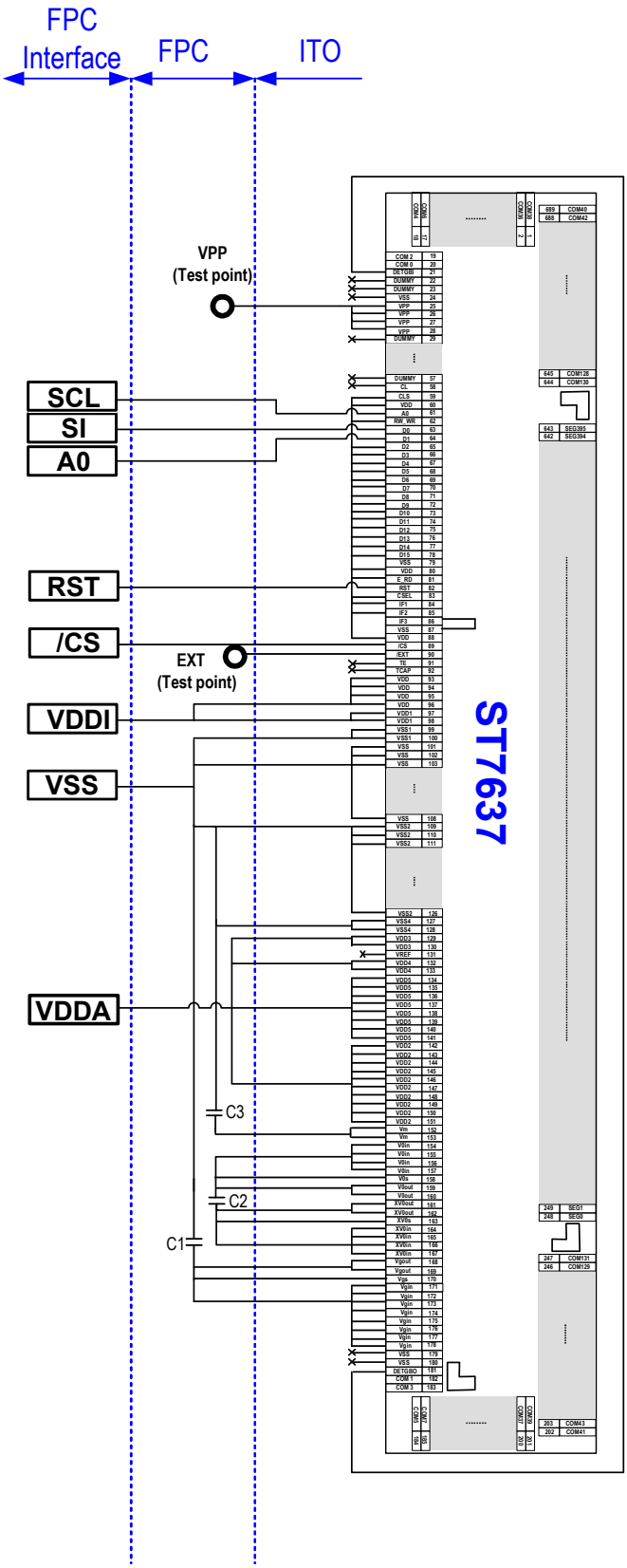

A1f – 3-line serial interlace Mode

IF[3:1]	LHL
CLS	H (internal OSC)
CSEL	H
C1	1uF/16V
C2	1uF/25V
C3	1uF/16V

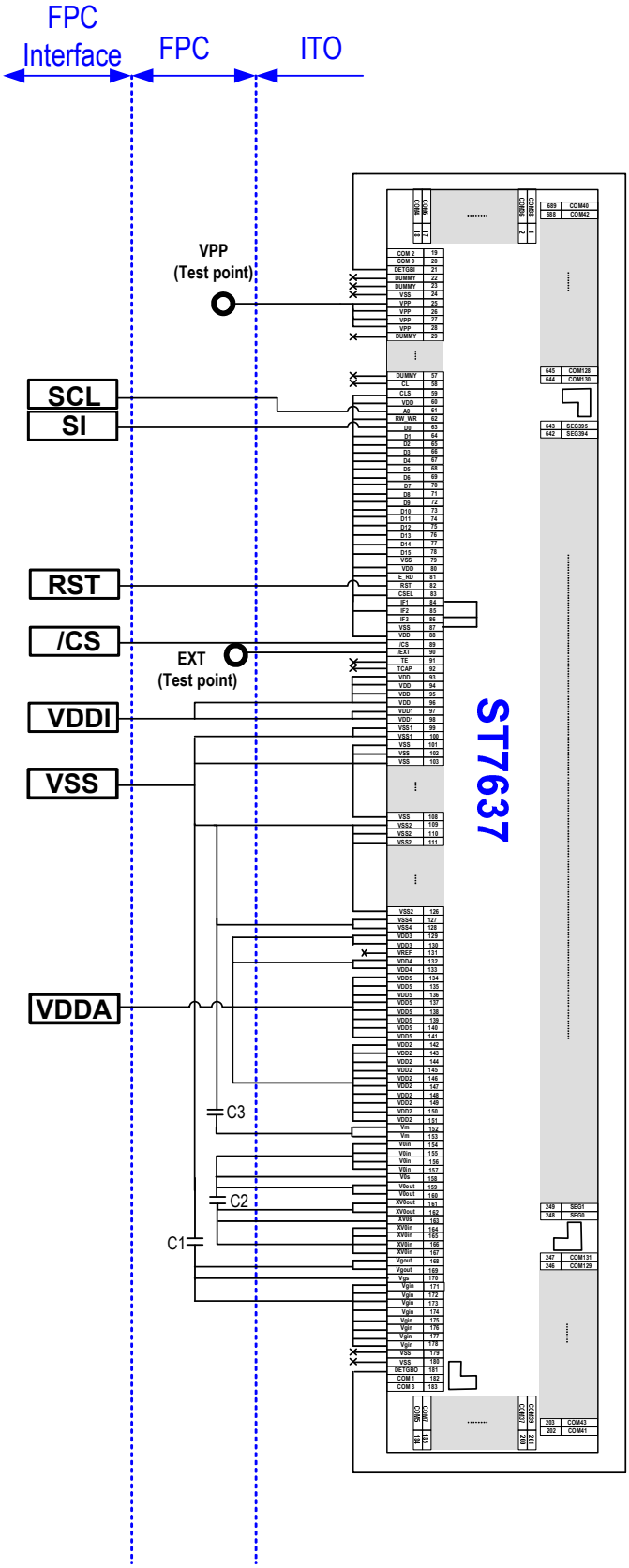

A2 – Power on flow and sequence:

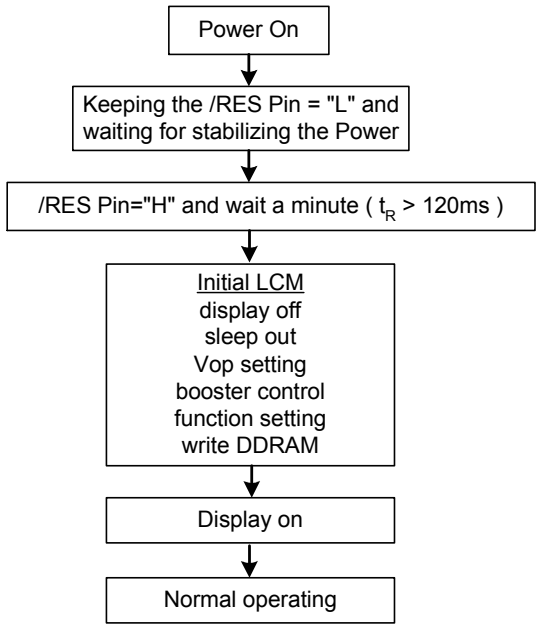

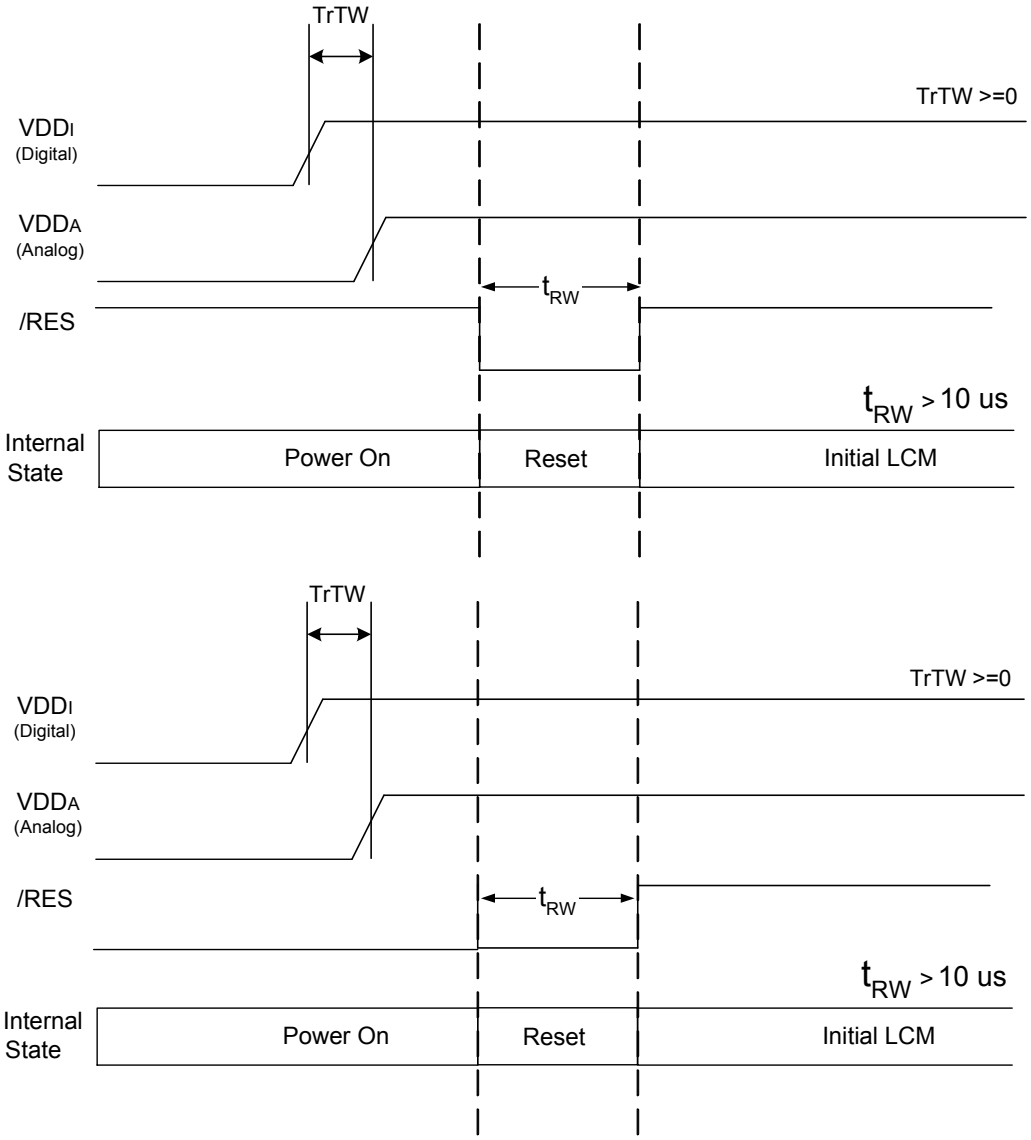

◆ A3 – Power off flow and sequence

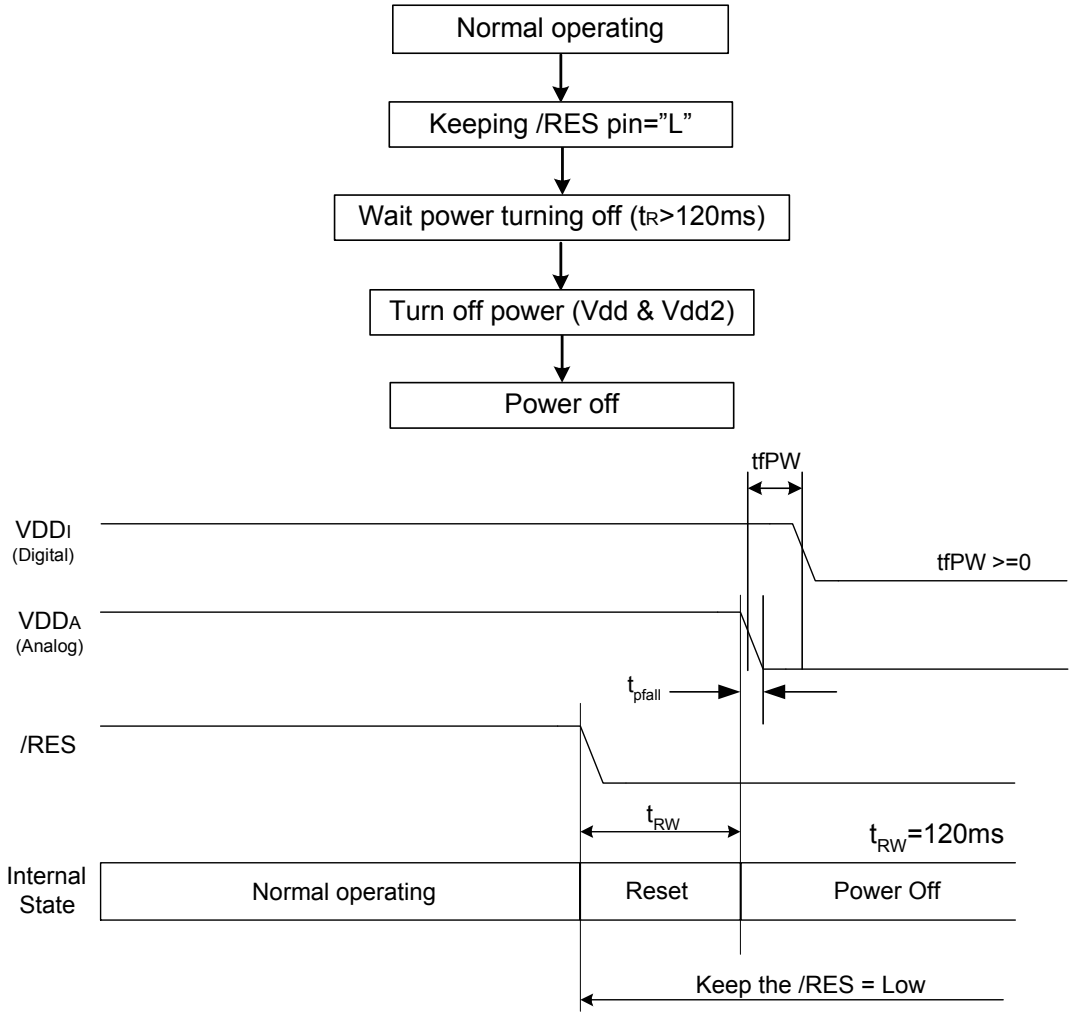

Note:

1. When turning VDD_A OFF, the falling time should follow the specification:

   $t_{PFall} \leq 300msec$

2. If the power off flow cannot meet this specification, it's recommend to use the resistor shown as blow.

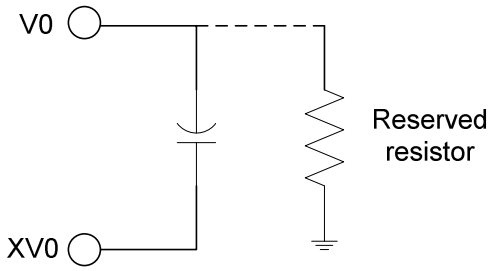

◆ A4 –OTP Burning Flow:

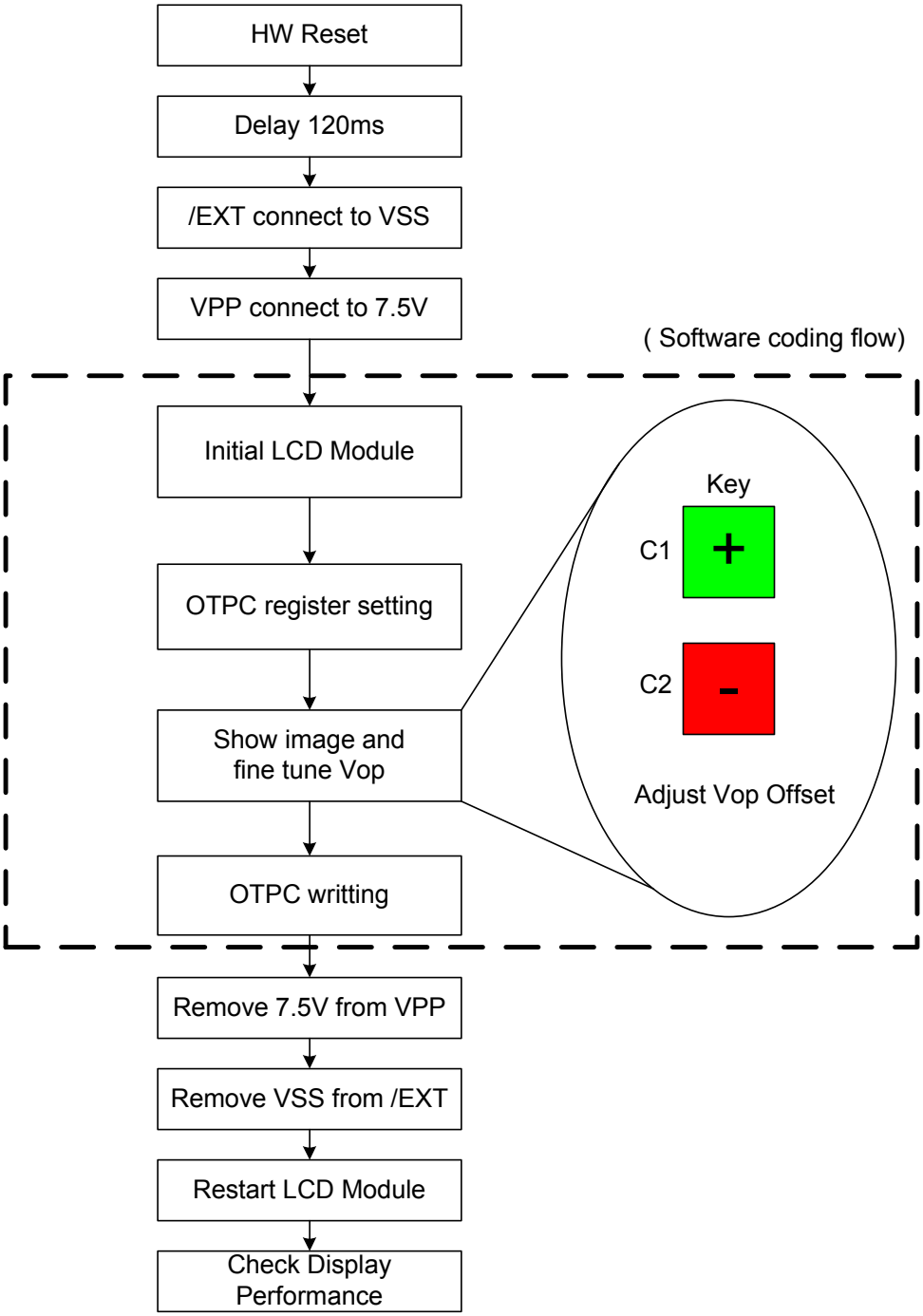

◆ A5 –Software coding flow:

```
void Initial_LCD_Module(void)
{
//----------disable autoread + Manual read once ------------------------------
    Write(COMMAND,0xd7);            // Auto Load Set
    Write(DATA,0x9f);               // Auto Load Disable
    Write(COMMAND,0xE0);            // EE Read/write mode
    Write(DATA,0x00);               // Set read mode
    delayms(10);                    // Delay 10ms
    Write(COMMAND,0xE3);            // Read active
    delayms(20);                    // Delay 20ms
    Write(COMMAND,0xE1);            // Cancel control

//--------------------------------- Sleep OUT ------------------------------------------
    Write(COMMAND, 0x28 );          // display off
    Write(COMMAND, 0x11 );          // Sleep Out
    delayms(50);                    //Delay 50ms

//-------------------------------Vop setting---------------------------------------------
    Write(COMMAND,0xC0);            //Set Vop by initial Module
    Write(DATA, 0x09);              //Vop = 14.2V
    Write(DATA, 0x01);              // base on Module

//--------------------------Set   Register--------------------------------------
    Write(COMMAND,0xC3);            // Bias select
    Write(DATA,0x03);               // 1/9 Bias, base on Module
    Write(COMMAND,0xC4);            // Setting Booster times
    Write(DATA,0x07);               // Booster X 8
    Write(COMMAND,0xC5);            // Booster eff
    Write(DATA,0x01);               // BE = 0x01 (Level 2)
    Write(COMMAND,0xCB);            // Vg with booster x2 control
    Write(DATA,0x01);               // Vg from Vdd2
    Write(COMMAND,0xD0);            // Analog circuit setting
    Write(DATA,0x1D);               //
    Write(COMMAND,0x3A);            // Color mode = 65k
```

	Write(DATA,0x05);		//
	Write(COMMAND,0x36);		// Memory Access Control
	Write(DATA,0x00);		
	Write(COMMAND,0xB0);		// Duty = 132 duty
	Write(DATA,0x83);		
	Write(COMMAND,0x20);		// Display Inversion OFF
	1. Set Gamma table for Module, please refer spec setting. **2. Set Temp compensation for Module, please refer spec setting.**		
	Write(COMMAND,0x2A);		// COL//
	Write(DATA,0x00);		// 0~127
	Write(DATA,0x7F);		
	Write(COMMAND,0x2B);		// Page //
	Write(DATA,0x00);		// 0~127
	Write(DATA,0x7F);		
}			
void Set_OTPC_Register(void)			
{			
//----------Set OTPC register----------			
	Write(COMMAND, 0xCD);		//ID2
	Write(DATA, 0x80);		
	Write(COMMAND, 0xB5);		// N-Line
	Write(DATA, 0x03);		// RST, 4-line inversion
	Write(COMMAND,0xD0);		// Analog circuit setting
	Write(DATA,0x1D);		//
	Write(COMMAND,0xD7);		//Auto read Set
	Write(DATA,0x9F);		//OTPB Disable
}			
Note#1			
void Fine_Tune_Vop(void)			
{			

//---------- Show Map ----------			
	Show_Image();		//Display a image
//---------- Display ON ----------			
	Write(COMMAND, 0x29);		// Display On
//----------Fine tune Vop offset----------			
	Write(COMMAND, 0xC1); or Write(COMMAND, 0xC2);		//Fine tuning Vop here by command 0xc1(VopOffsetInc),0xc2(VopOffsetDec).
	Note#2		
}			

void OTPC_Writing(void)			
{			
//----------Display OFF----------			
	Write(COMMAND, 0x28);		// Display Off
	Delayms(50);		// delay 50ms
//----------OTPC writing----------			
	Write(COMMAND, 0x00F0);		// Keep Frame Rate
	Write(DATA, 0x0012);		//
	Write(DATA, 0x0012);		
	Write(DATA, 0x0012);		
	Write(DATA, 0x0012);		
	Write(COMMAND, 0x00E4);		//OTP selection
	Write(DATA, 0x0058);		// Select OTPC
	Write(COMMAND, 0x00E5);		// Set OTP writing setup
	Write(DATA, 0x000C);		
	Write(COMMAND, 0x00E0);		// Read/write mode setting
	Write(DATA, 0x0020);		// Set Write mode
	Delayms(100);		// Delay 100ms
	Write(COMMAND, 0x00E2);		// Write active
	Delayms(100);		// Delay 100ms
	Write(COMMAND, 0x00E1);		// Cancel control
}			

```
void Gamma_Table( void )
{
    Write(COMMAND,0xF9);    //
    Write(DATA,0x00);       //
    Write(DATA,0x02);       //
    Write(DATA,0x04);       //
    Write(DATA,0x06);       //
    Write(DATA,0x08);       //
    Write(DATA,0x0A);       //
    Write(DATA,0x0C);       //
    Write(DATA,0x0E);       //
    Write(DATA,0x10);       //
    Write(DATA,0x12);       //
    Write(DATA,0x14);       //
    Write(DATA,0x16);       //
    Write(DATA,0x18);       //
    Write(DATA,0x1A);       //
    Write(DATA,0x1C);       //
    Write(DATA,0x1E);       //

}
```

```
void Temp_Compensation( void )
{
    Write(COMMAND,0xF0);    //frame frequency in temp
    Write(DATA,0x06);       //45Hz (-30^C ~ -10^C)
    Write(DATA,0x0B);       //60Hz    (-10^C ~ 0^C)
    Write(DATA,0x0D);       //72Hz (0^C ~ 10^C)
    Write(DATA,0x12);       //77Hz (10^C ~ 90^C)
    Write(COMMAND,0xF7);    //Temp Sensitivity Setting
    Write(DATA,0x06);       //
    Write(COMMAND,0xF4);    //TC Curve
    Write(DATA,0xFF);       //
    Write(DATA,0x36);       //
    Write(DATA,0x04);       //
    Write(DATA,0x00);       //
    Write(DATA,0x33);       //
```

	Write(DATA,0x42);		//
	Write(DATA,0xC4);		//
	Write(DATA,0x59);		//
}			

Note:

#1 If the Vop and display performance is not suitable after burning OTP，the Vop has to refine tune.

#2 In this section"+" & "-" key button, please execute Write(COMMAND,0xC1) to increase one step at Vop and execute Write(COMMAND,0xC2) to decrease one step at Vop, if necessary.

#3 The TC is turn on in burning flow. If LCD module is too dark or bright, it's an effect of backlight.

◆ **A6**- selection of application voltage

- Vop requirement: [Vdda x BS x BE] ≧ Vop
- BS is Vop booster stage and BE is booster efficiency. Referential values are listed below: (assume Vdda=2.8V, Vop booster stage=x8)
  n-line setting=0x00: BE=77%
  n-line setting=0x01: BE=66%
  n-line setting=0x06: BE=74%
  actual BE should be determined by adding module loading and ITO resistance value.
- Vdda<3V: 3V≦Vg≦2xVdda, Vdda≧3V: 1.8V≦Vg≦2xVdda.
- Vm=Vg/2 and 0.7V<Vm<Vdda-0.7V.
- The worst condition should be considered:
  Low temperature effect and display on with gray pattern on panel.

<u>Referential LCD module setting</u>

Condition:Vdda=2.8V, Vop booster stage=x8, booster level=level 2, duty=1/132, panel size=1.5”

bias	Vop (n-line=0x00)	Vop (n-line=0x01)	Vop (n-line=0x06)
1/10	15V~17.24V	14.78V	15V~16.57V
1/9	13.5V~17.24V	13.5V~14.78V	13.5V~16.57V

Note:it is recommended to reserve some range for user adjustment and temperature effect.

ST7637 Serial Specification Revision History		
Version	**Date**	**Description**
0.x		Preliminary version
1.0	2007/01	First issue
1.1	2007/03	1. Modfity Application Note example circuit ST7637 pad name 2. Remove command B4h. 3. Modify resolution value of example2 in vertical scroll example.
1.2	2007/04	1. Specify OTP and OTPB register. 2. Modify application note A1b and A1d. 3. Modify application note A3 for abnormal power off.
1.3	2007/05	1. Redefine the programming mechanism of non-volatility memory. 2. Modify type error in command 0xC2h.
1.4	2007/10	1. Specify relationship between Vg, Vdda and Vddi. 2. Add application note for selection of application voltage. 3. Redefine the value of sleep current.
1.5	2008/07	1. Remove external clock function. 2. Fix type error in command 0x0F. 3. Remove ID code setting and modify temperature compensation setting suggestion in initial code. 4. Remove un-necessary characteristics.
1.6	2009/03	1. Correct some type errors.