# CFAG12864A-Cxx Dimensions

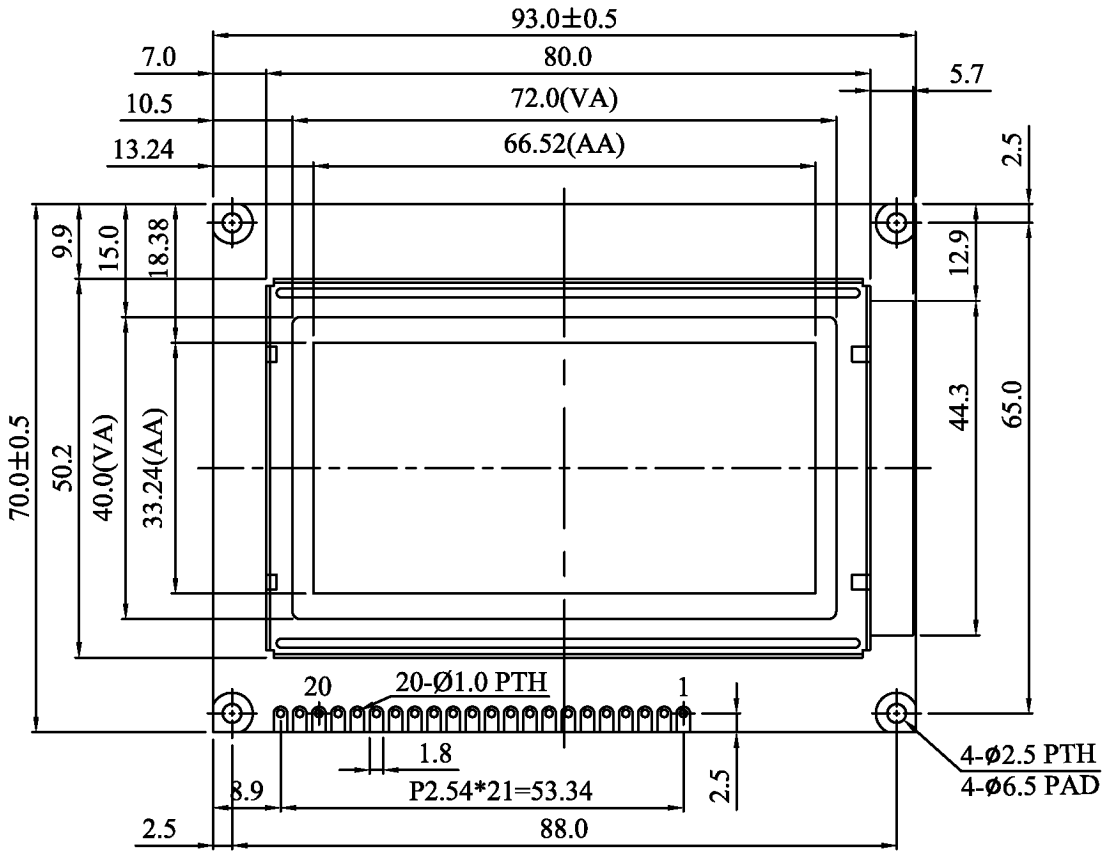


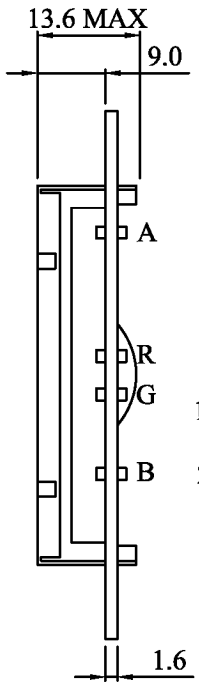


1.R&G solder to original A,K.
2.B/L's PCB has solder pads.

LED B/L

The non-specified tolerance of dimension is ±0.3 mm .

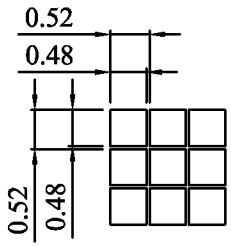


DOT SIZE
SCALE 10/1