CFAG12864A-Txx-V Millimeter Dimensions

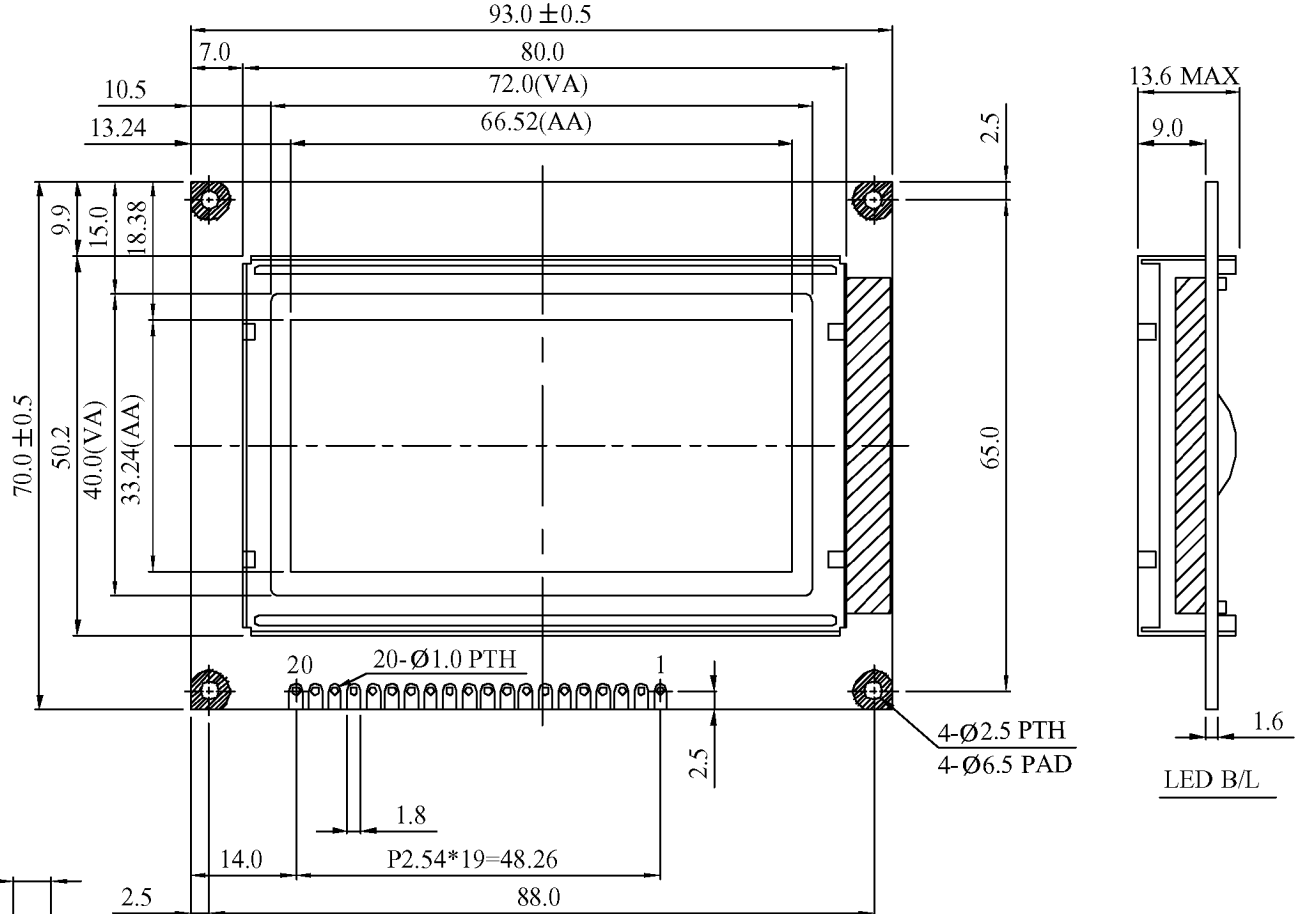

PIN NO.	SYMBOL
1	Vss
2	Vdd
3	Vo
4	D/I
5	R/$\overline{W}$
6	E
7	DB0
8	DB1
9	DB2
10	DB3
11	DB4
12	DB5
13	DB6
14	DB7
15	CS1
16	CS2
17	$\overline{RES}$
18	Vout
19	A
20	K

The non-specified tolerance of dimension is ±0.3mm.

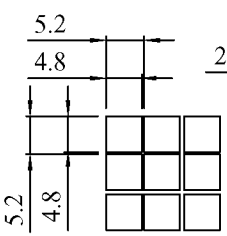

DOT SIZE

SCALE 10/1